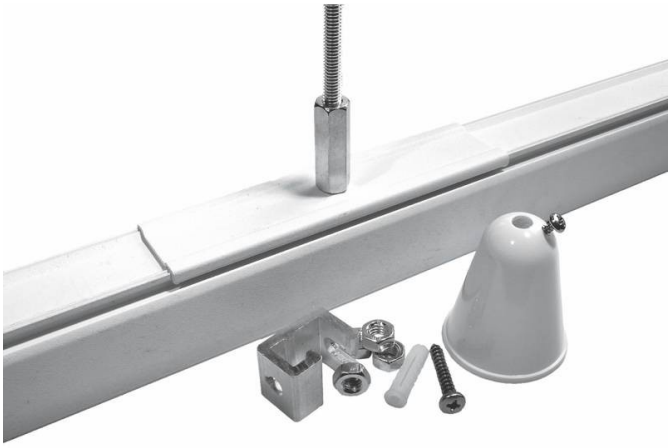

Reinforcement plate

Reinfocement plate with 1m suspension rod finished in Black colour

Item code	**86.T002.M148.02**
Product type	**Indoor**
Category	**Tracklights**
Family	**3 Circuit track Accesories**
Subfamily	**Reinforcement plate**
Pictograms	

Product	
Colour	**Black**
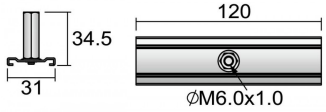
Scheme