Tube

Lavov Tracklight from the family Tube with a power of 30W and an optic of 26degrees with a total lumen output of 2400 lm and an efficiency of 80 lm/W. CCT 3000 Kelvin. Made in Die cast aluminium and finished in White colour.ON-OFF driver.

Item code	**86.T005.3321.01**
Product type	**Indoor**
Category	**Tracklights**
Family	**Tube & Zoom Tube**
Subfamily	**Tube**
Pictograms	

Scheme

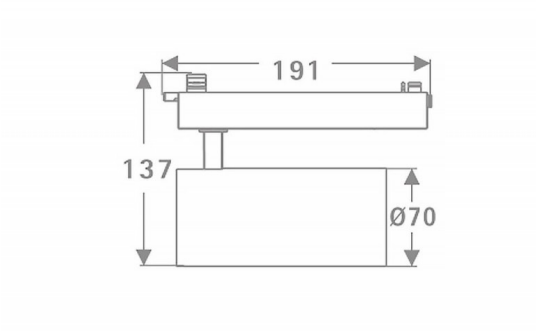

Photometry

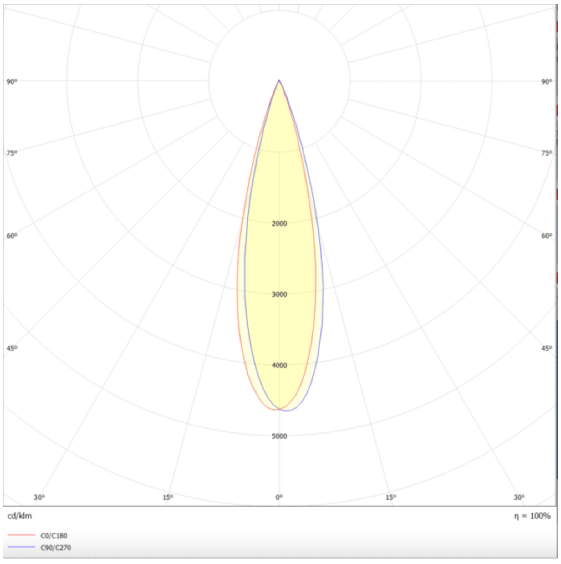

Product	
Real power (W)	**30**
Real luminous flux (Lm)	**2400**
Luminous efficiency (Lm/W)	**80**
Beam angle (º)	**26**
Life time (h)	**50000h L80B10**
IP	**20**
Electrical class insulation	**Class I**
Operating temperature	**15**
Colour	**White**
Chip Brand	**Philip**
Control gear included	**yes**
Control gear	**ON-OFF**
Light source	**LED**
Type of LED	**COB**
Colour temperature (K)	**3000**
Colour consistency (SDCM)	**SDCM3**
CRI	**80**