Tube tracklight

Lavov tracklight from the family CABINET type Tube tracklight with a power of 1W and a 24º beam angle. Finished in white colour.Dimensions ø18x30mm.. With a total lumen output of 100lm and a luminous efficiency of 100lm/W. CCT 2700K. Driver ON-OFF, No-dim. Made in Die cast body and PC lens.

Item code	**86.TL23.1221.01**
Product type	**Indoor**
Category	**Tracklights**
Family	**CABINET**
Subfamily	**Tube tracklight**
Pictograms	CRI 90 · CE · IP 20 · 50000h L80B10

Dimensions	
Product dimensions (mm)	**ø18x30mm**

Scheme

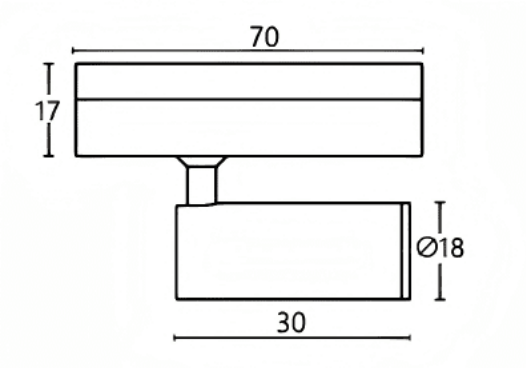

Product	
Real power (W)	**1**
Real luminous flux (Lm)	**100**
Luminous efficiency (Lm/W)	**100**
Beam angle (º)	**24º**
Colour	**white**
Control gear included	**YES**
Control gear	**ON-OFF, No-dim**
Flicker Free	**Yes**
Average life time (h)	**50000hrs L80 B10**
Colour temperature (K)	**2700**
Colour consistency (SDCM)	**SDCM<3**
CRI	**90**