Slip Fitter Mount

1 Wire the AC cable correctly and fix the luminaire to the pole by screws.

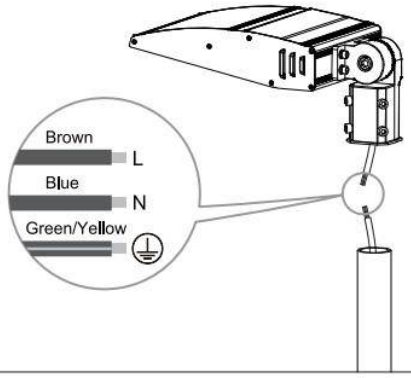

2 Adjust the slip fitter to the desired angle, then tighten the screws on the slip fitter.

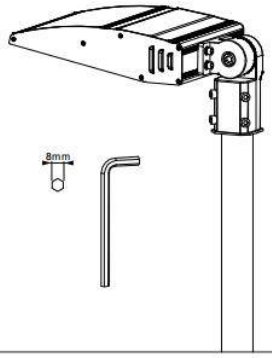

Bracket Mount

1 Fix the luminaire to mounting surface by bolts and nuts.

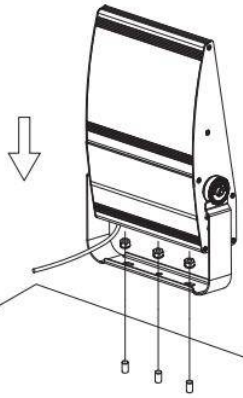

2 Loosen the screws on both side of the bracket and adjust the luminaire to the desired angle, then tighten the screws.

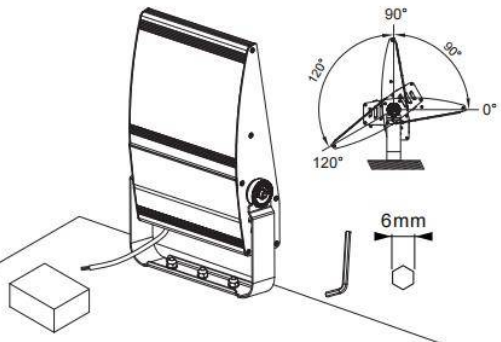

3 Wire the AC cable correctly.

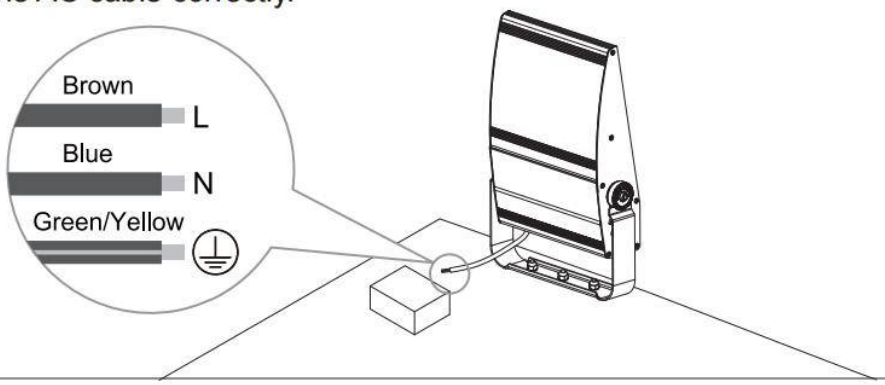
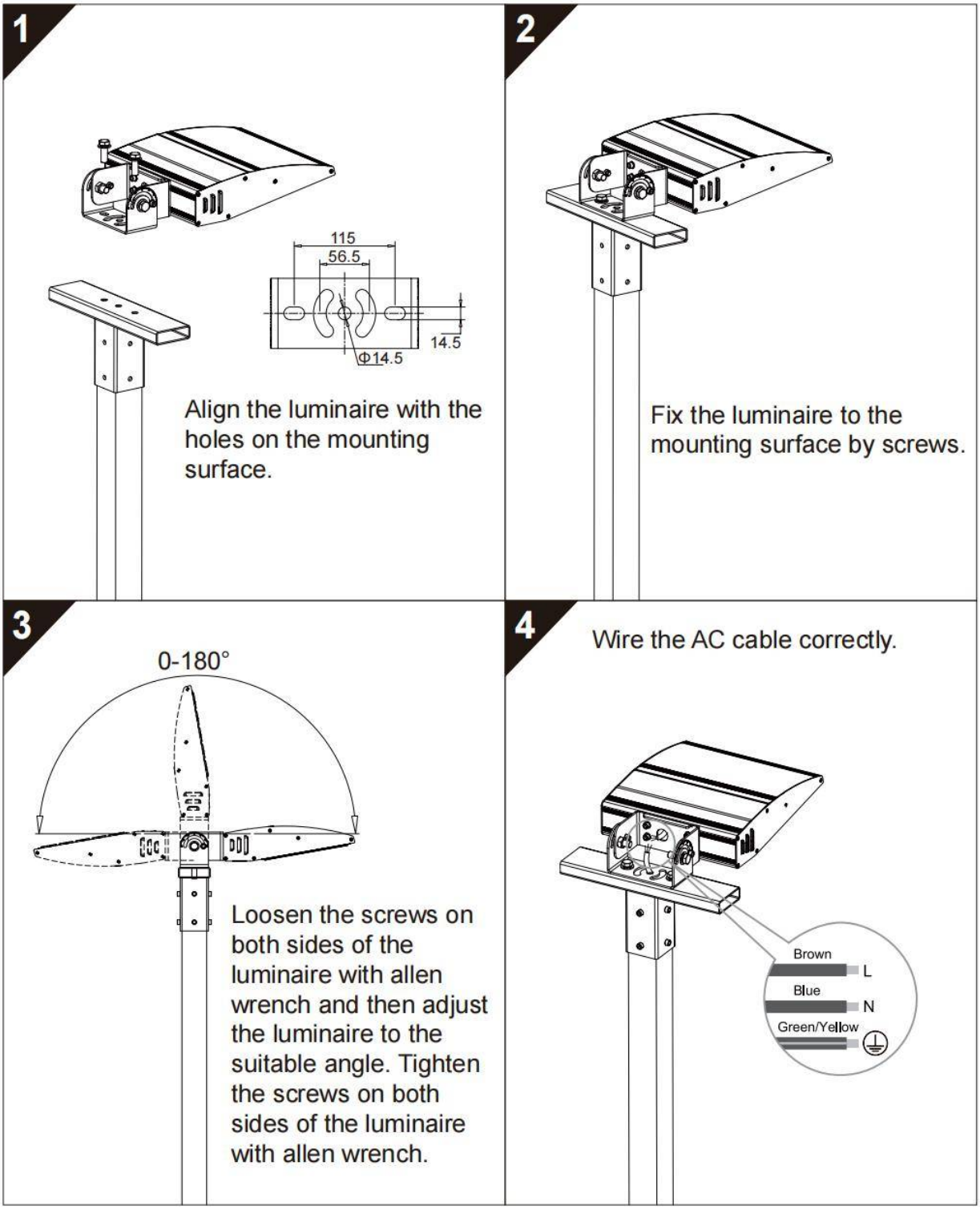
Trunnion Mount