Cut out in the right size:
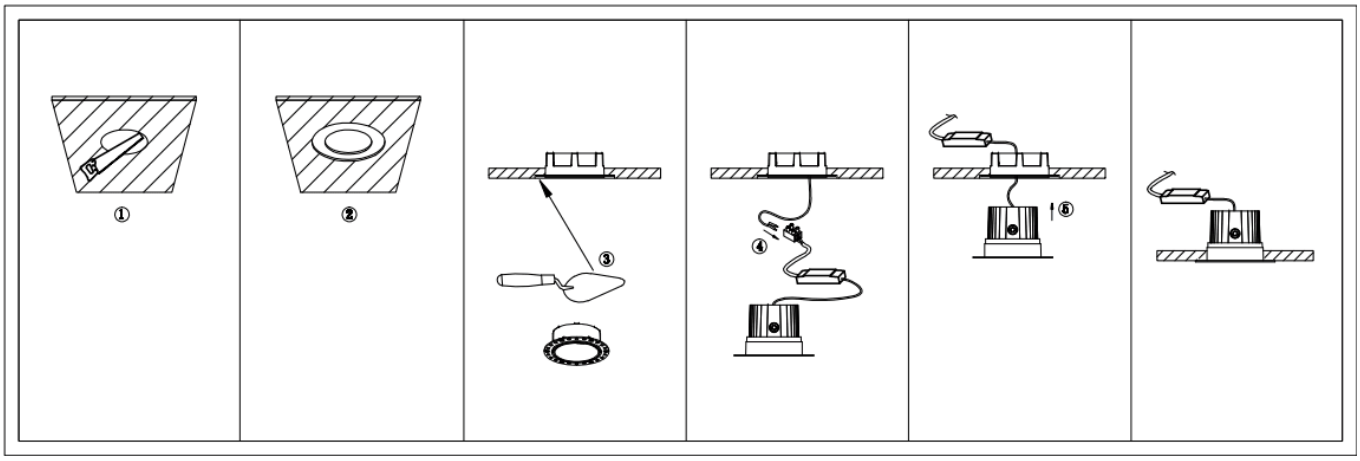
86.D059.1***.** 80mm
86.D059.2***.** 100mm
86.D059.3***.** 110mm
86.D059.4***.** 135mm