Cut out in the right size:
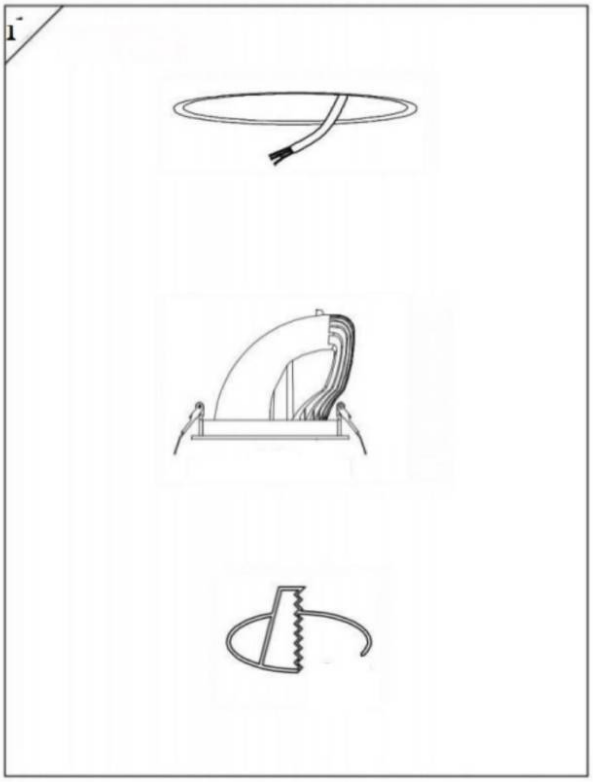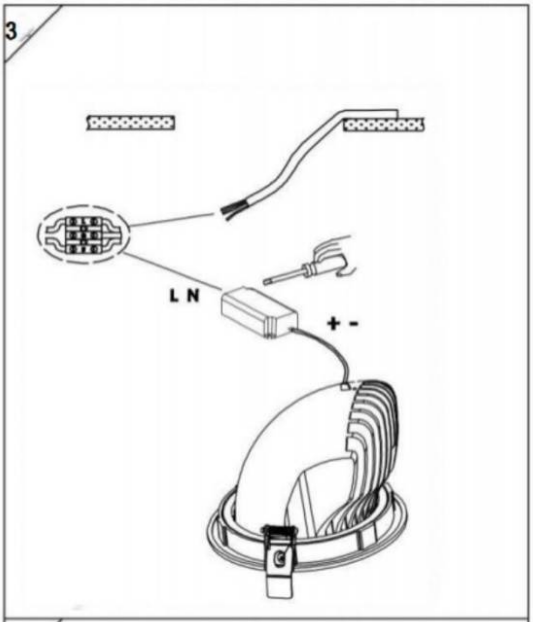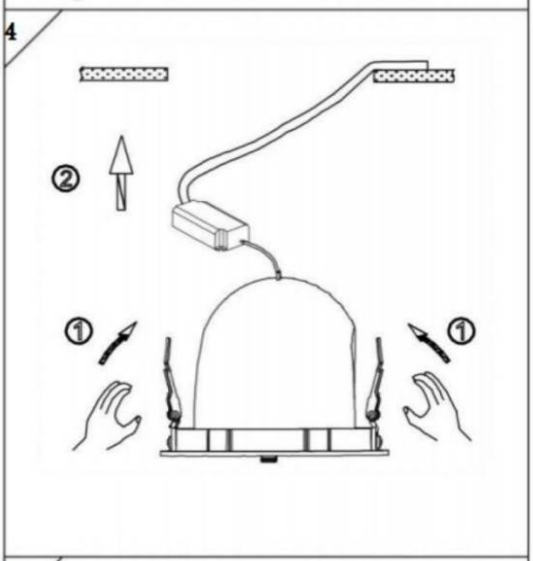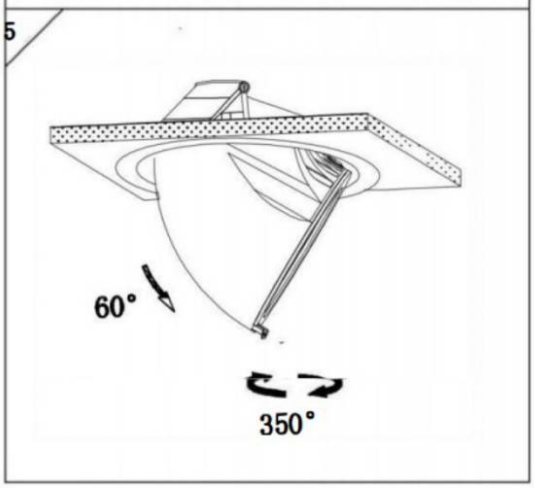
86.D039.1***.** 85mm
86.D039.2***.** 115mm
86.D039.3***.** 170mm
86.D039.4***.** 225mm