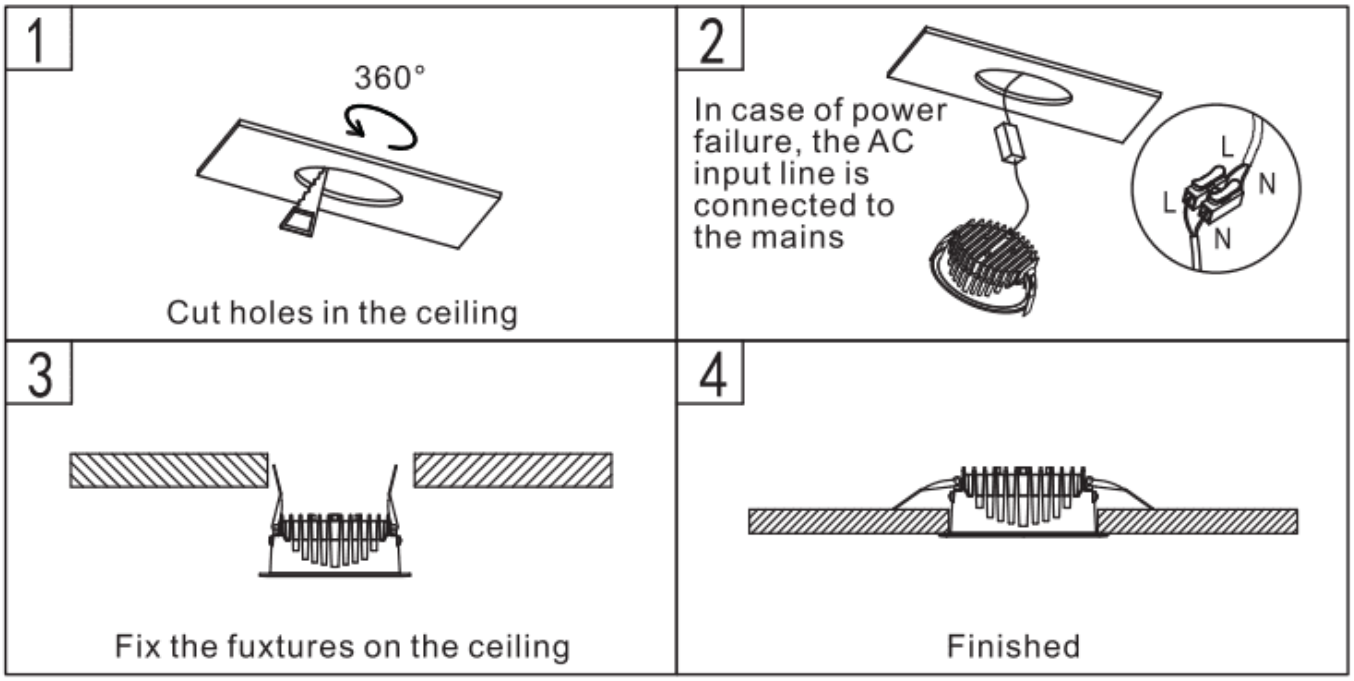
1
360°
Cut holes in the ceiling
2
In case of power failure, the AC input line is connected to the mains
L
N
L
N
3
Fix the fuxtures on the ceiling
4
Finished