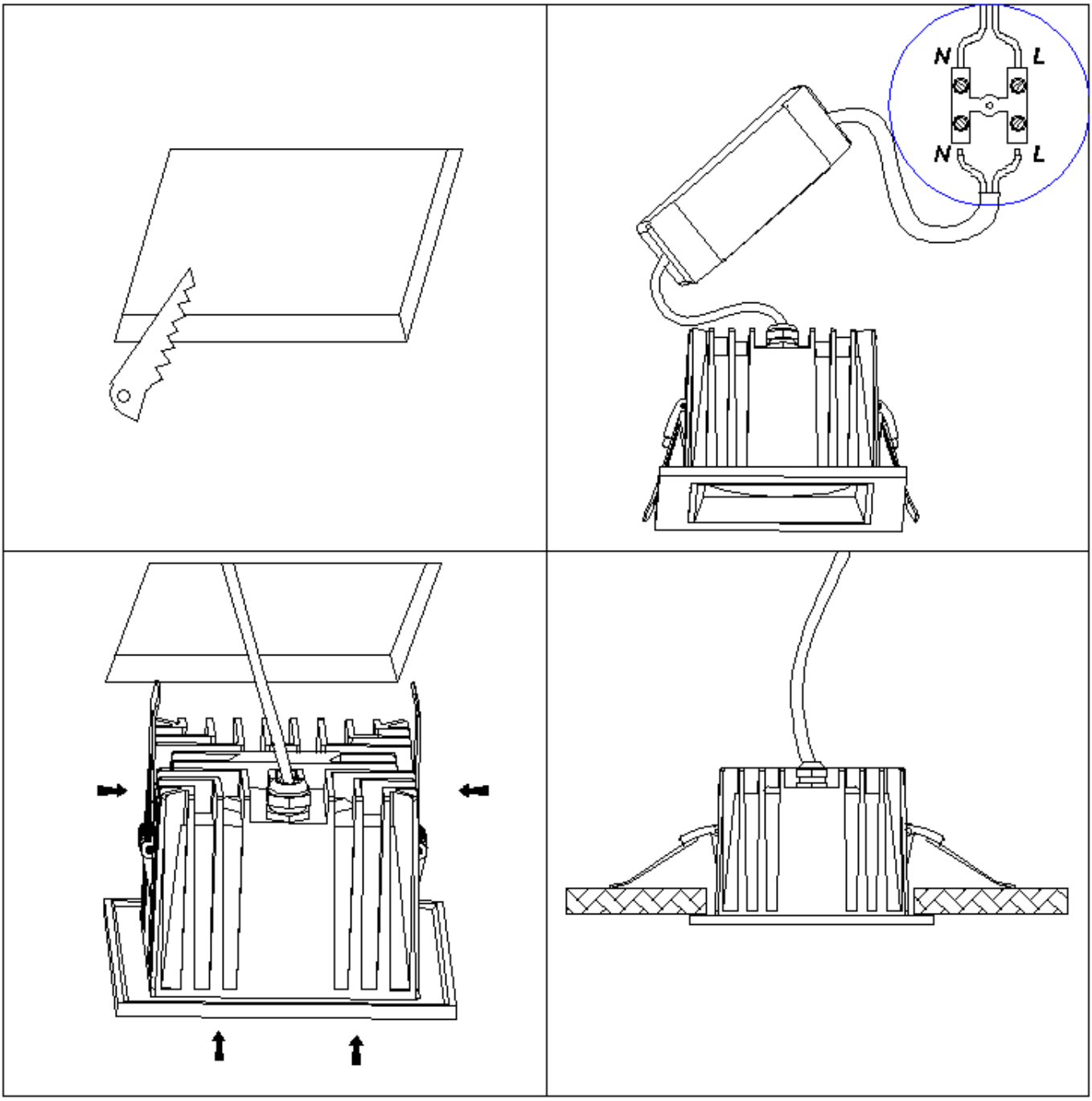
N
L
N
L