**This is not an included accessory and need to be sourced seperately.**

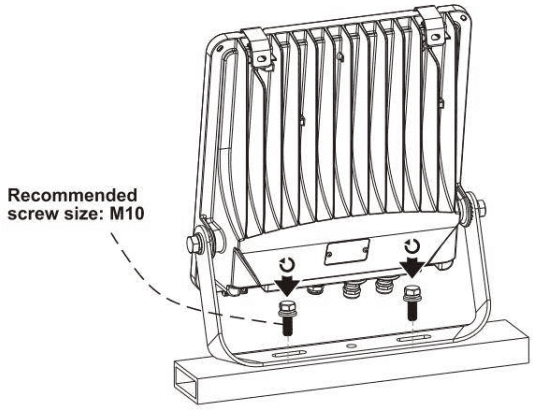


**Rotatable Angle**

loosen the sreawes

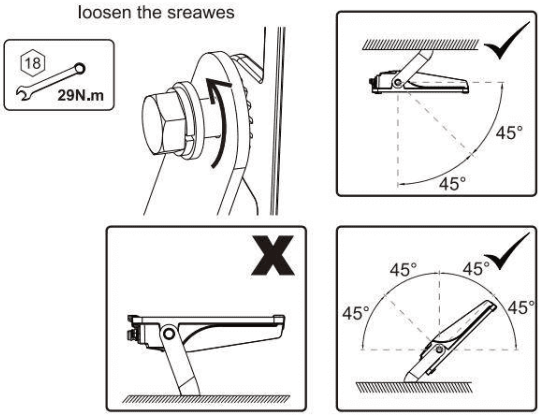

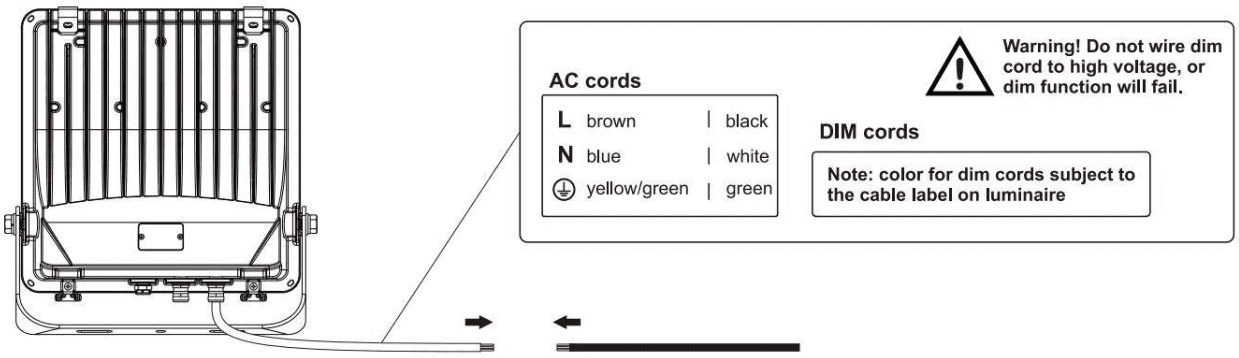
## Connect Wires