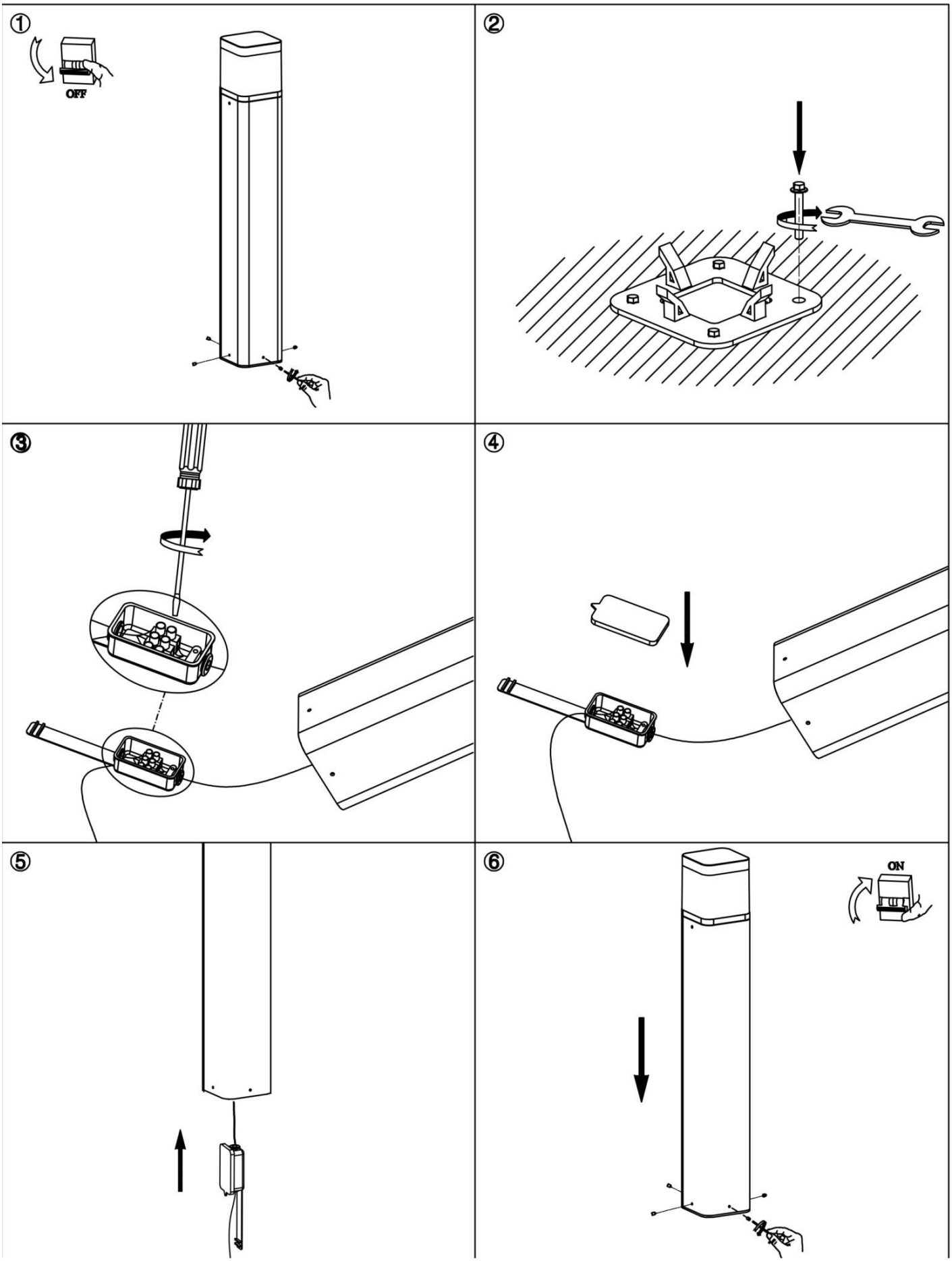
①
OFF
②
③
④
⑤
⑥
ON