

Ceiling-mounted installation

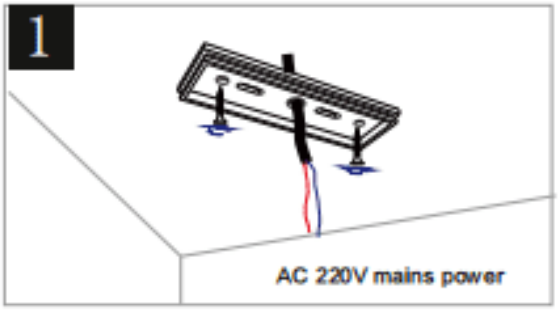

Attach the ceiling rose to the ceiling using the provided screws.

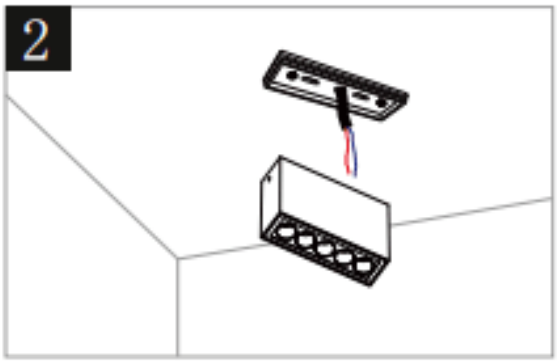

Connect the reserved wires to the lamp's power supply, then tighten the lamp to the ceiling mount.

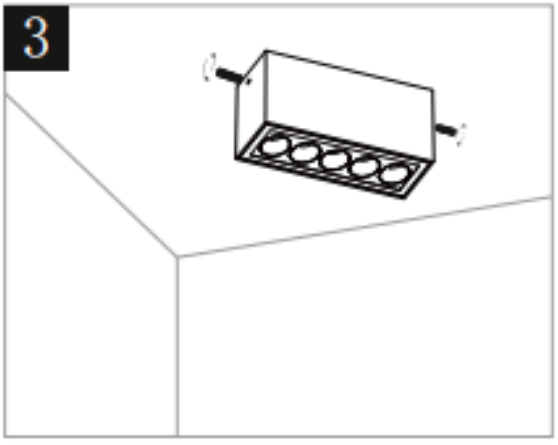

Use the screws provided with the fixture to secure the light to the ceiling.

After installation, turn on the power to check if the light works.

Wall-mounted installation method

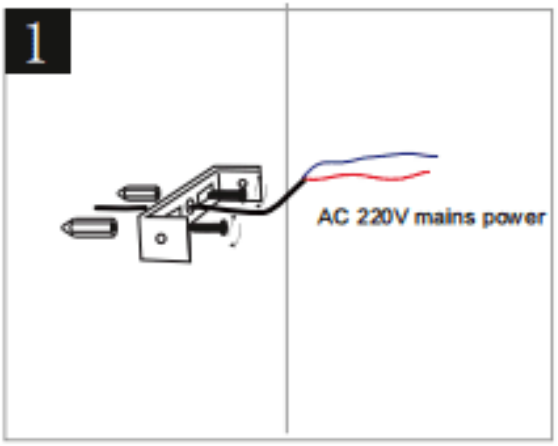

Install the mounting plate on the ceiling with the provided screws, leaving space for the power supply wires.

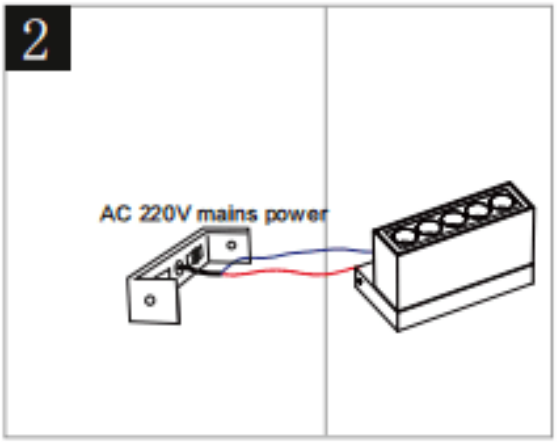

Connect the reserved power supply wire to the lighting fixture power wire

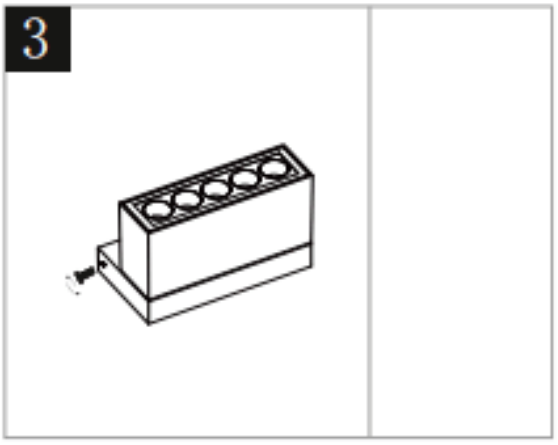

Use the screws provided with the fixture to secure the light to the ceiling.
After installation, turn on the power to check if the light works.