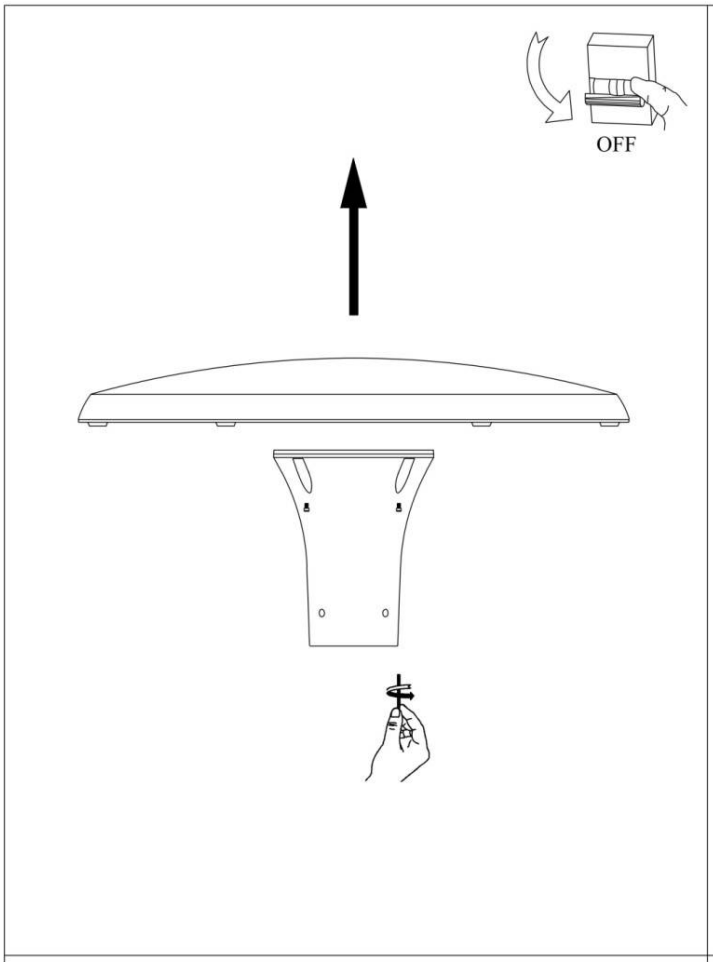
OFF

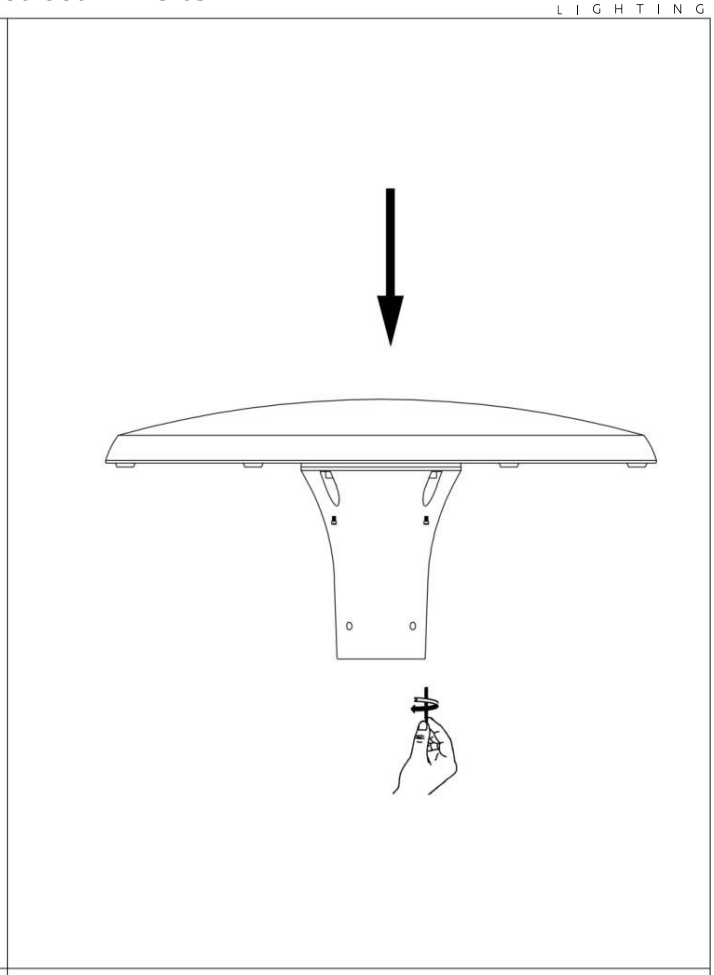

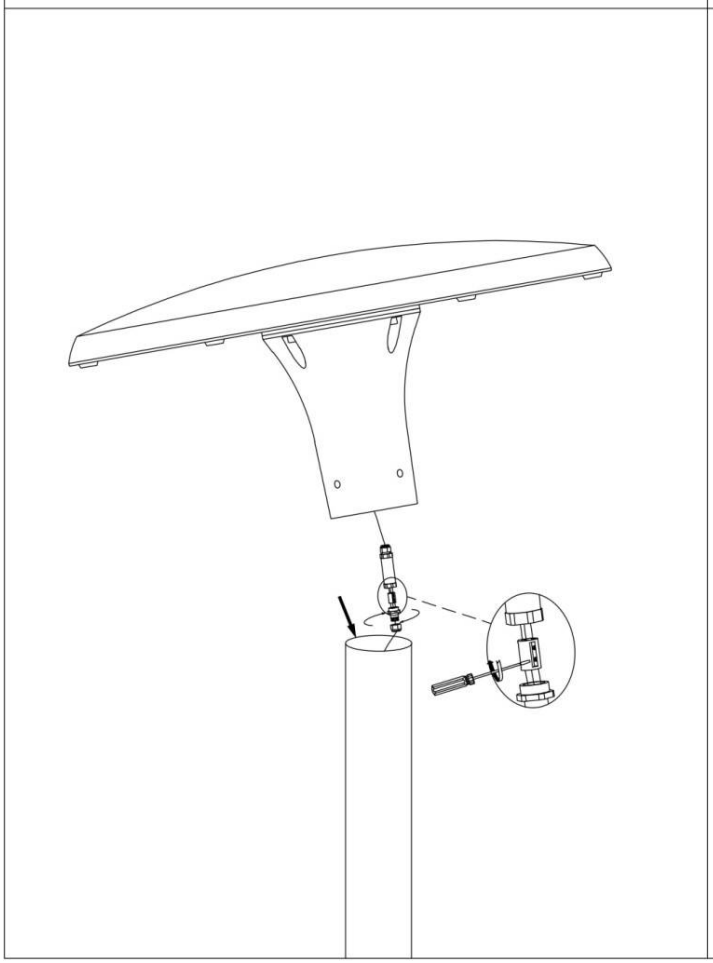

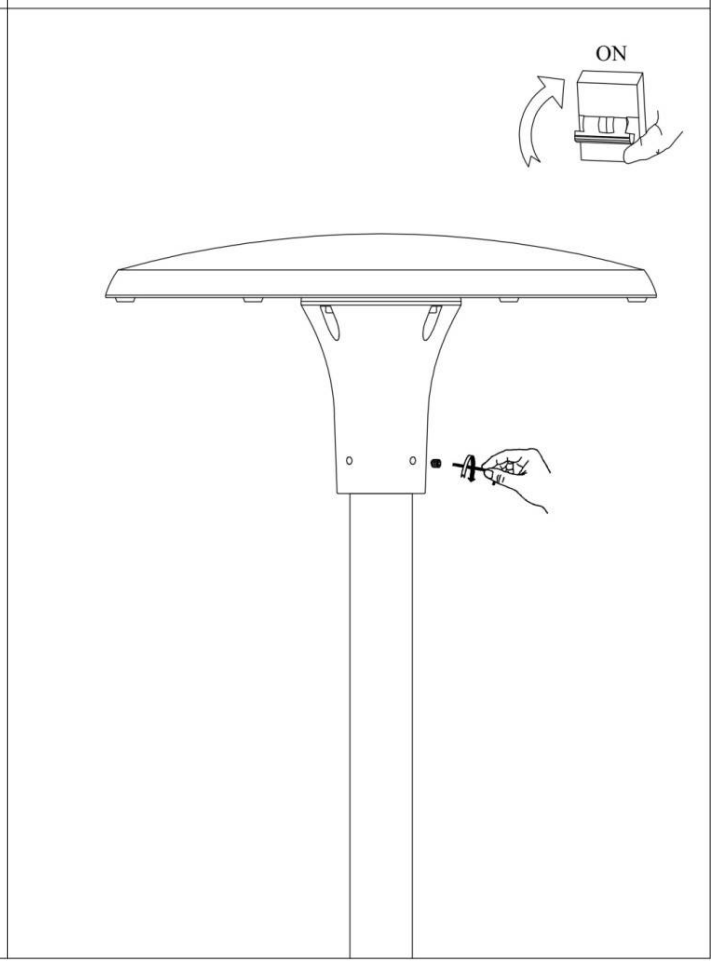
ON