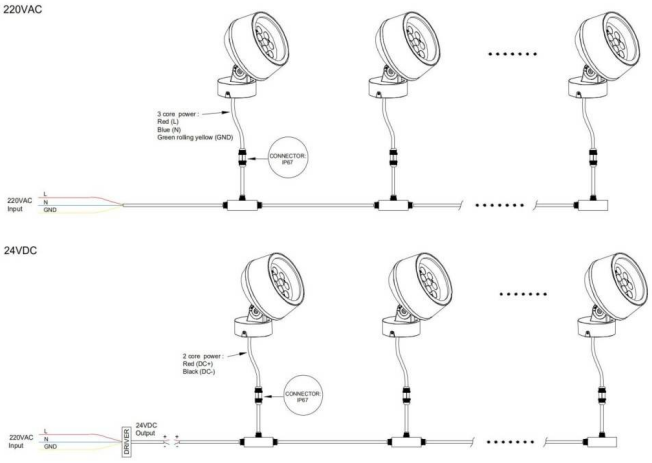
220VAC
3 core power :
Red (L)
Blue (N)
Green rolling yellow (GND)
CONNECTOR: IP67
220VAC Input
L
N
GND
24VDC
2 core power :
Red (DC+)
Black (DC-)
CONNECTOR: IP67
220VAC Input
L
N
GND
DRIVER
24VDC Output

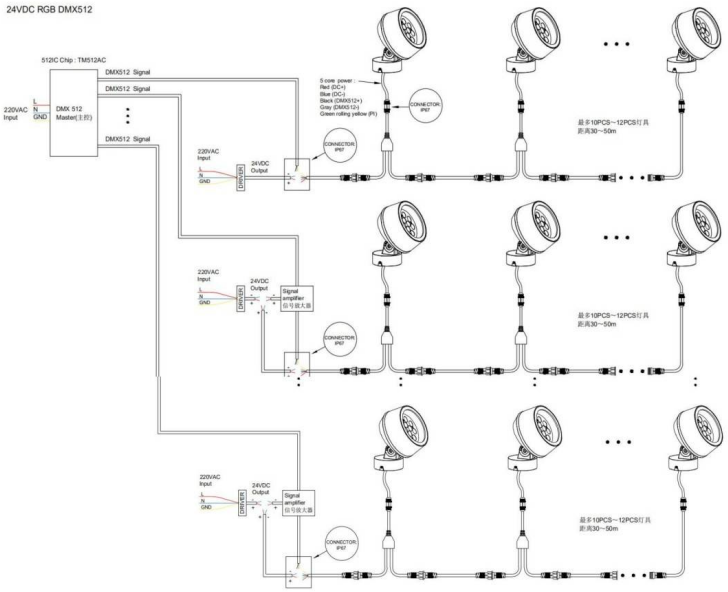
24VDC RGB DMX512
512IC Chip : TM512AC
220VAC Input
L
N
GND
DMX 512 Master(主控)
DMX512 Signal
DMX512 Signal
DMX512 Signal
5 core power :
Red (DC+)
Blue (DC-)
Black (DMX512+)
Grey (DMX512-)
Green rolling yellow (PE)
CONNECTOR: IP67
220VAC Input
L
N
GND
DRIVER
24VDC Output
Signal amplifier
信号放大器
最多10PCS～12PCS灯具
距离30～50m