Step 1

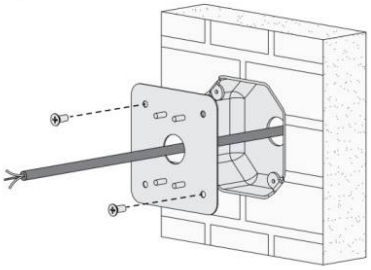

Secure multi-hole mounting plate

Step 2

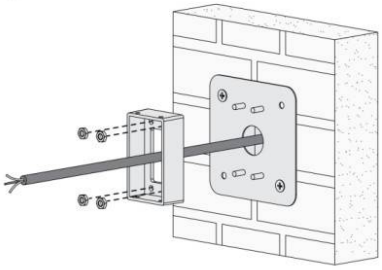

Secure the wall bracket

Step 3

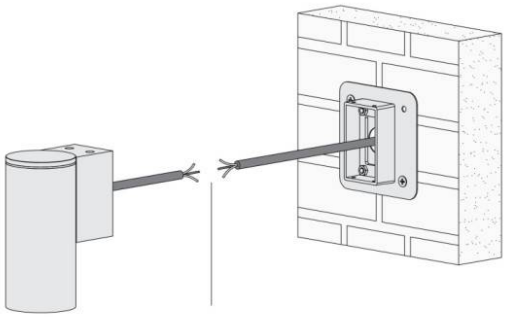

Connect the power cable

Step 4

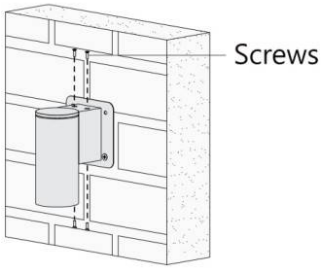

Install the light fixture on the wall

5.Wiring diagram

High voltage on/off fitting:refer to the following recommended wiring method

Example of wiring: