

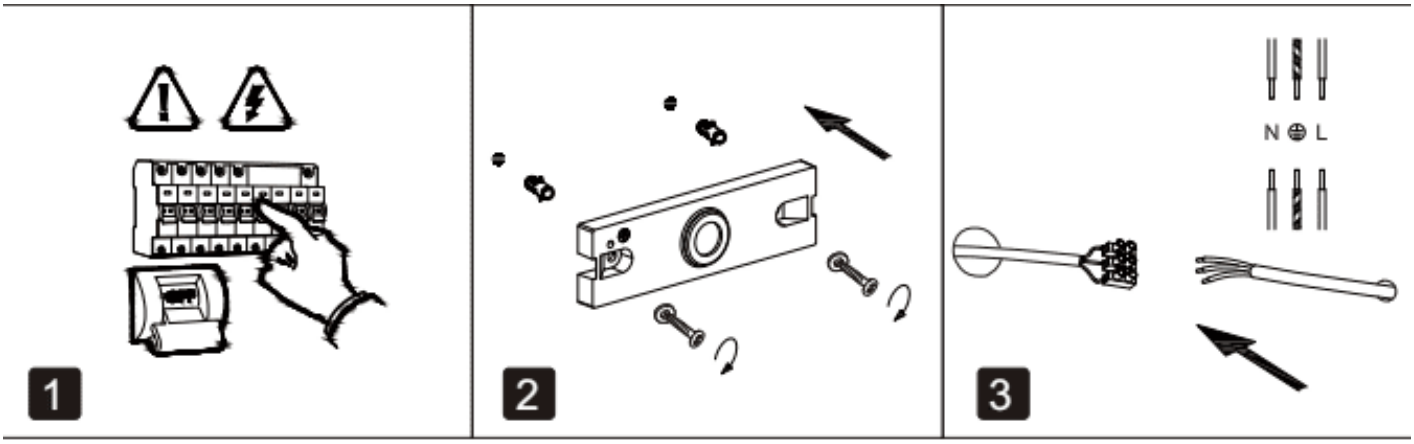
1
2
N L
3

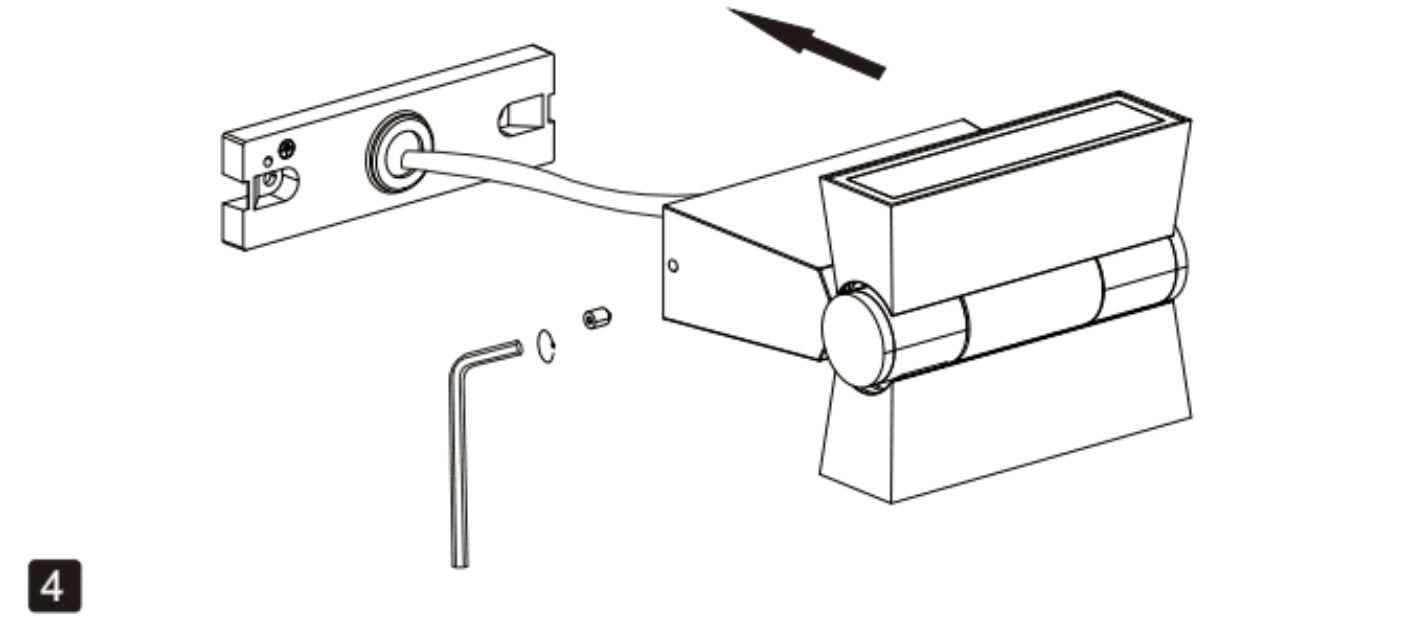
4

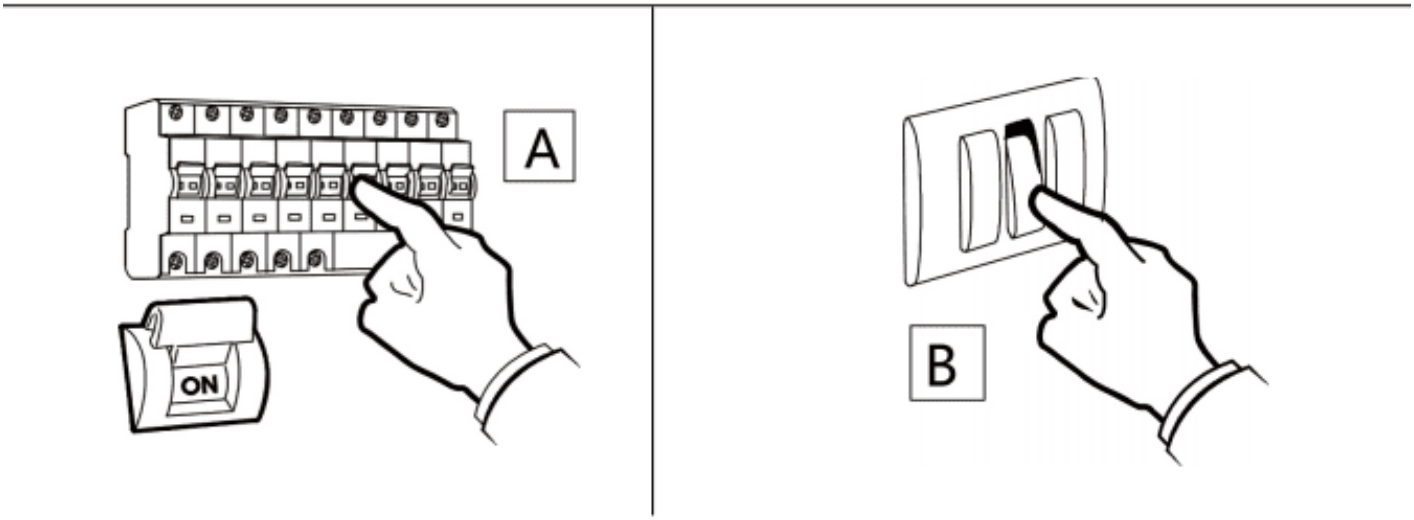
A
ON
B