Recessed Plasterboard Cut Hole Ceiling Installation

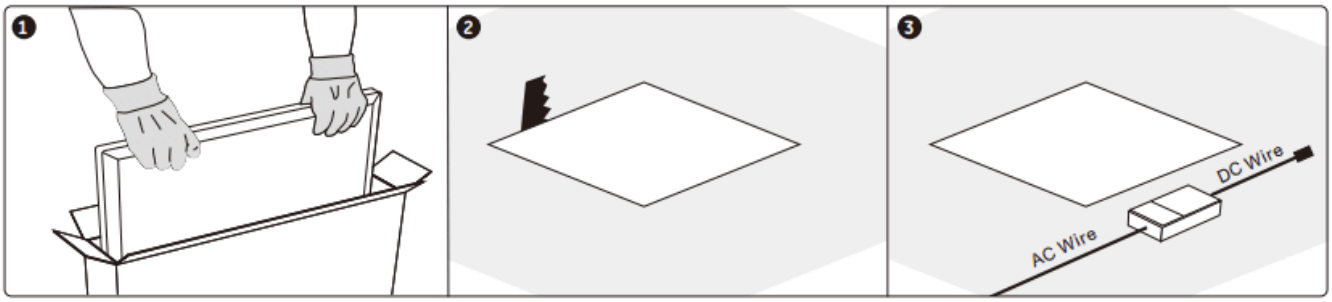

Take the panel out of the box and protective bag, Remove the protective film.

Cut a square hole in the ceiling 10mm smaller than the LED Panel.

Connect the LED Driver to AC mains.

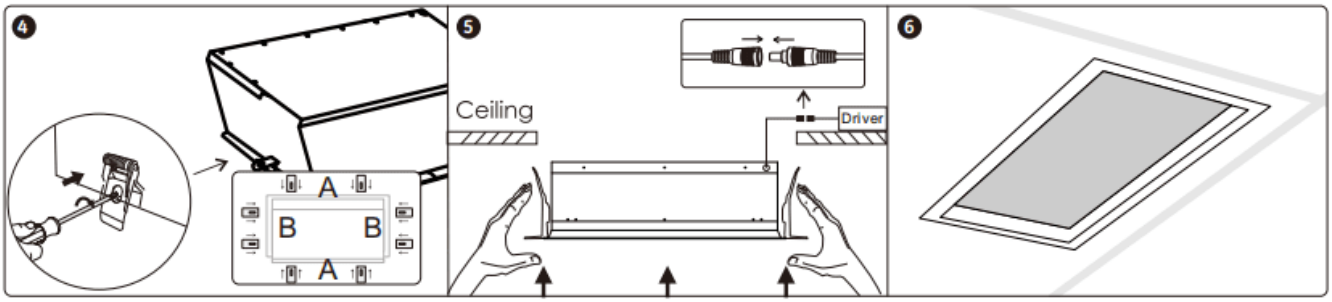

Screw the springs. (optional Locked by default.) If String Closely installation, need to change the position of the springs.

Connect the DC connector from driver to panel. Push the Light into the ceiling with the springs raised. Pay attention to the direction of light.

Tear off the protective film of the lampshade and turn on the skylight.
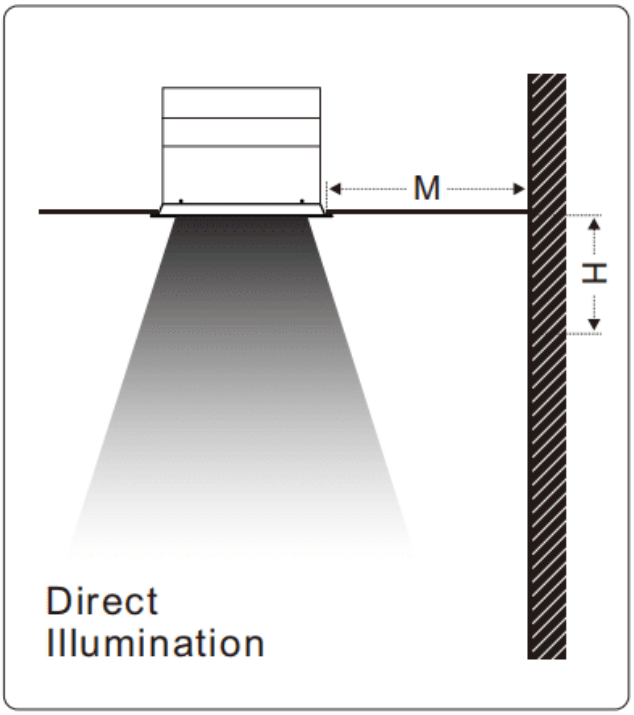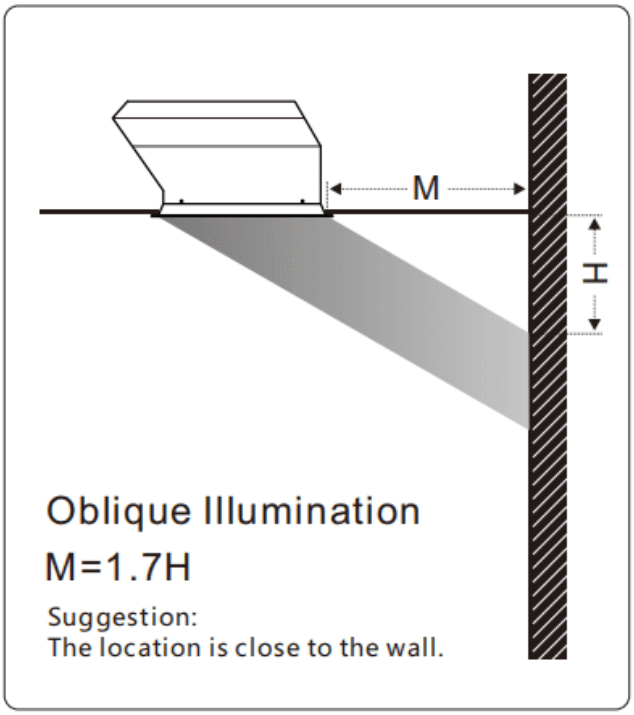
Installation Location