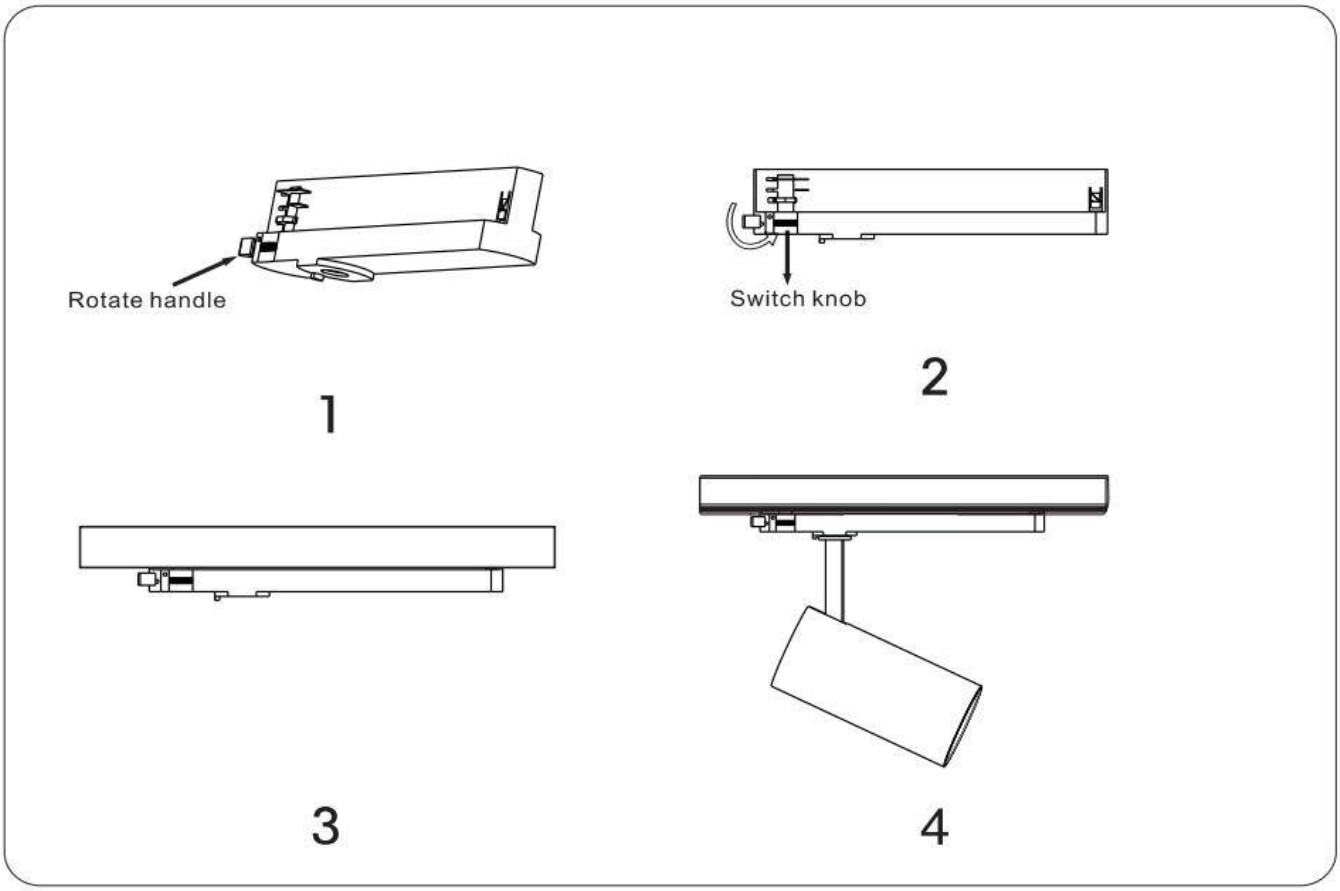
Rotate handle
1
Switch knob
2
3
4