INDOOR / PROYECTORES A CARRIL / CARRIL MAGNÉTICO / LUXBALL TRACKLIGHT D60*145MM

Código artículo 86.TL01.T333.01

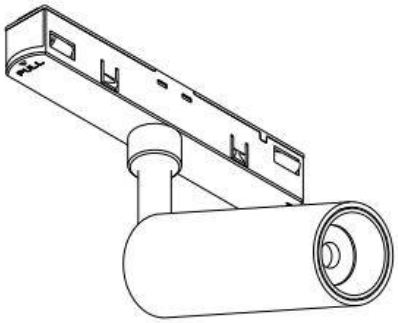

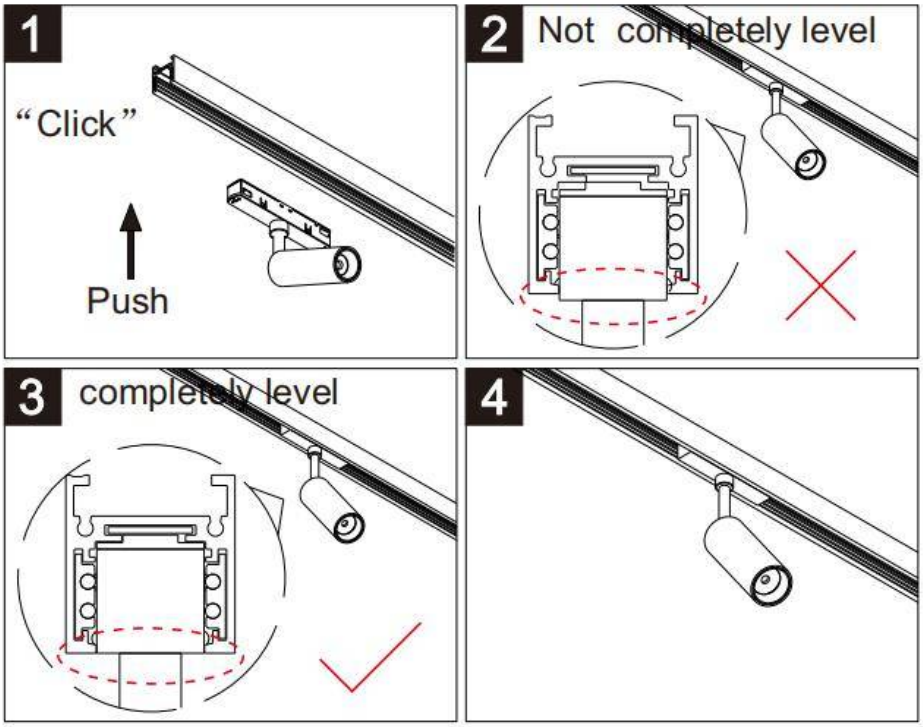

Note: The positive and negative (+, -) signal terminal of 0-10V dimming luminous must be installed corresponding to the input terminal.
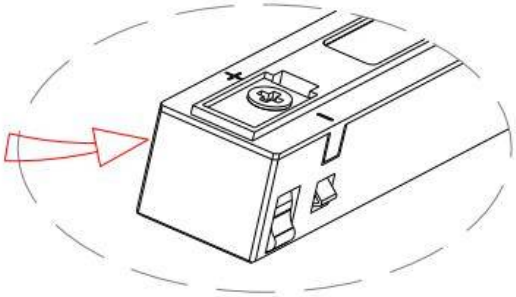
The positive and negative (+, -) signal terminal of DALI dimming luminous, the signal termial does not need to be installed corresponding to the input termial.