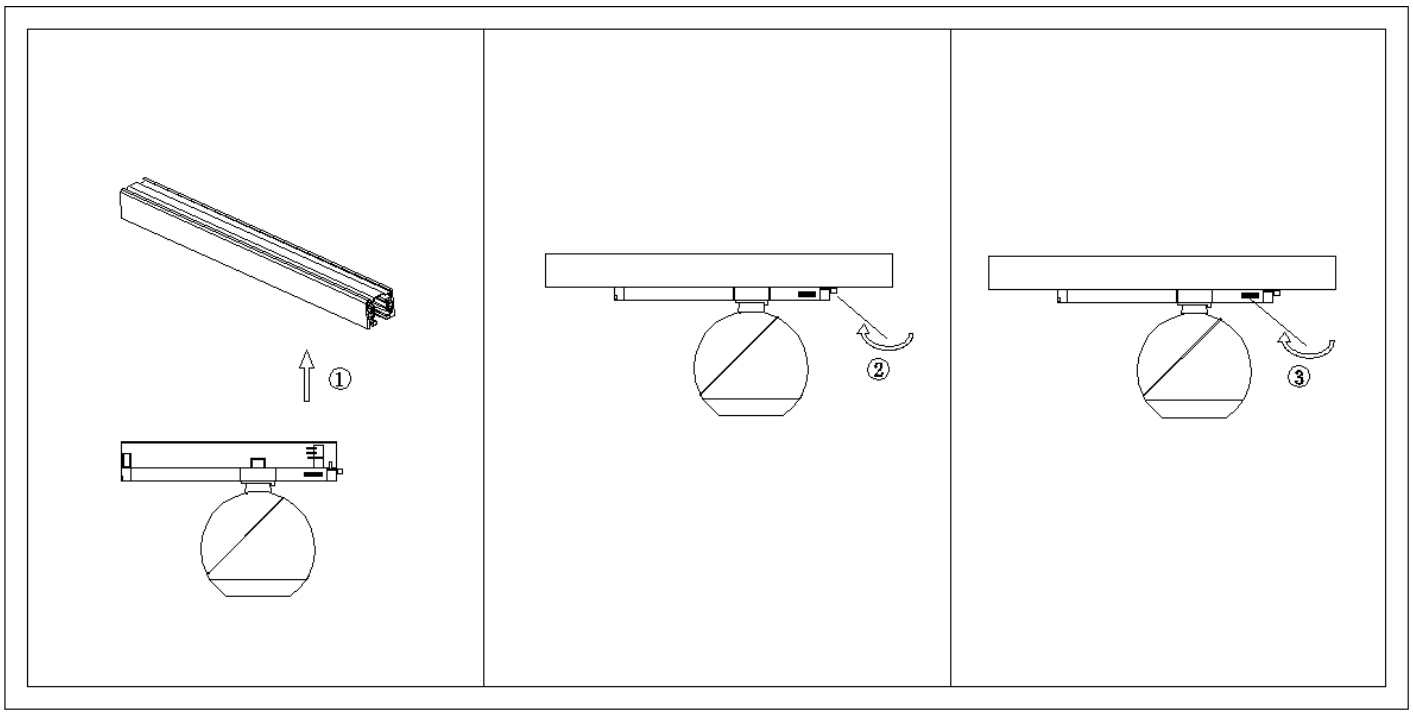
①
②
③