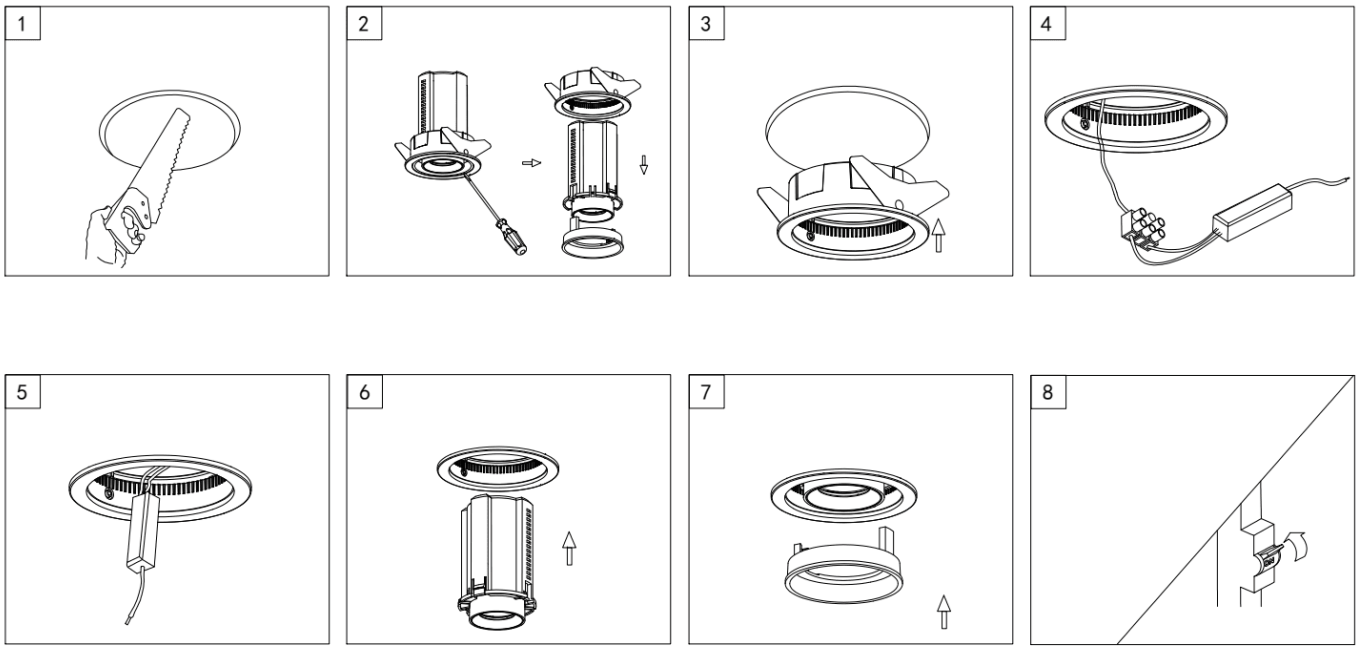Code article 86.D146.4421.02