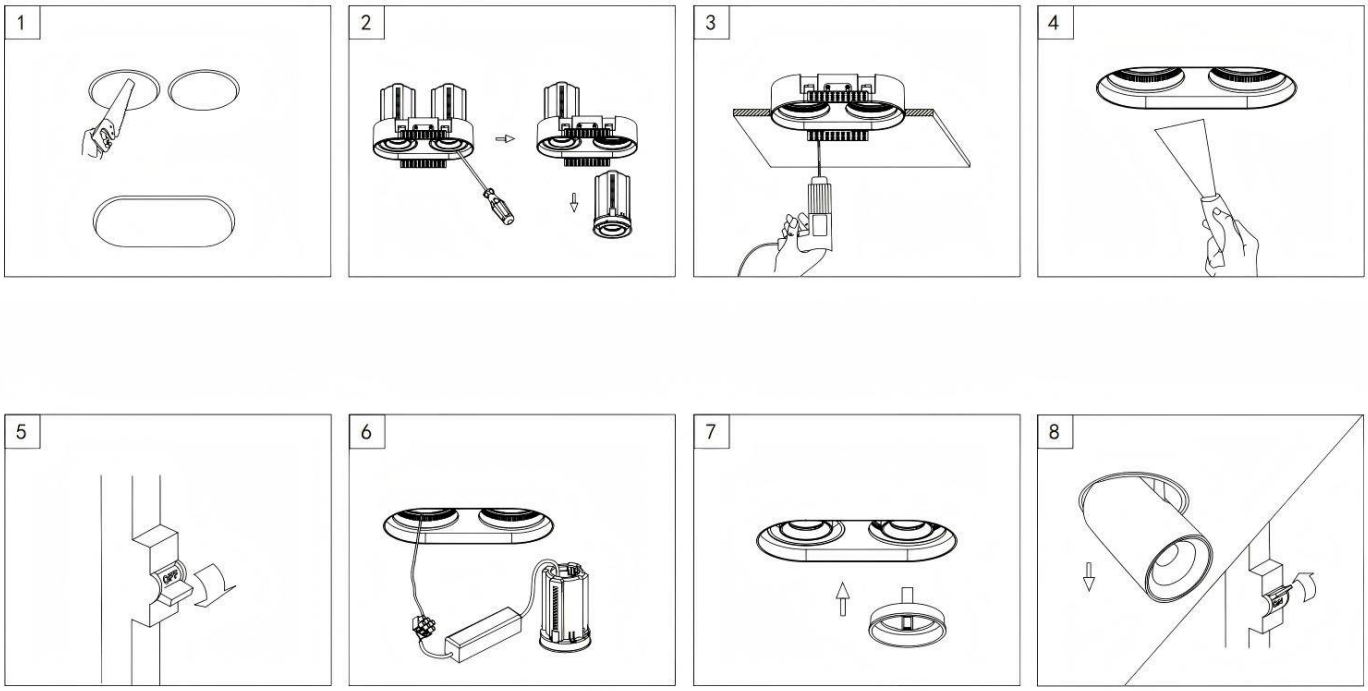Code article 86.D147.1439.02