INDOOR / SPOTS ENCASTRÉS / PTT /
PTT R2 SMART
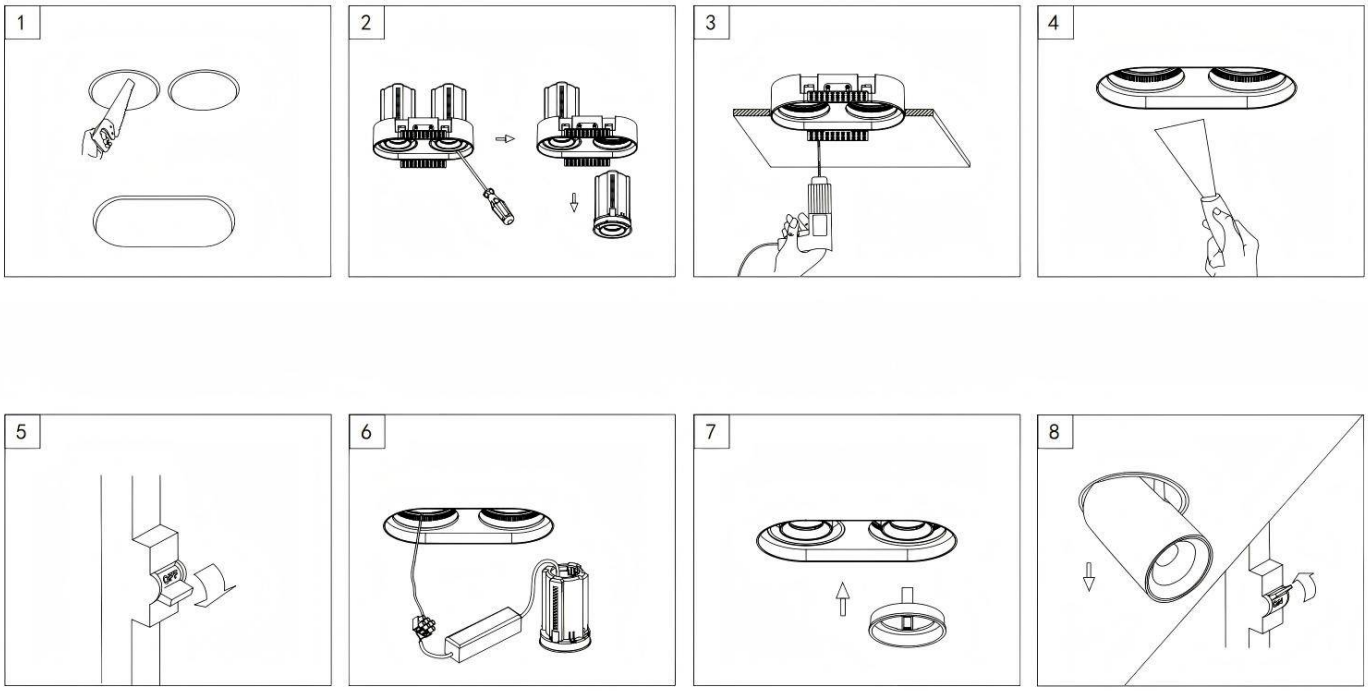
Code article 86.D147.1439.02