Code article 86.I008.0001.00
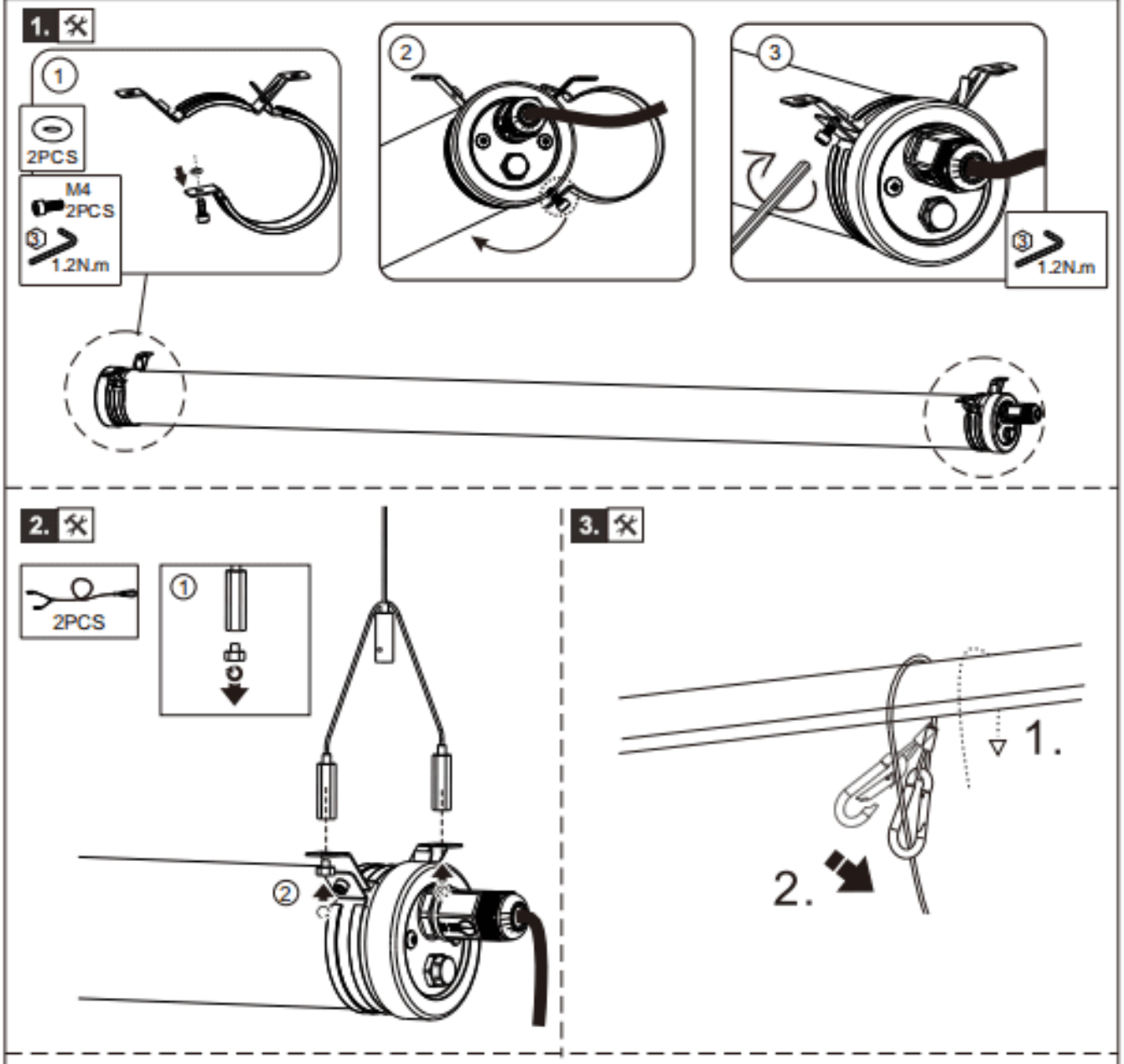
Suspension Mounting (Optional)