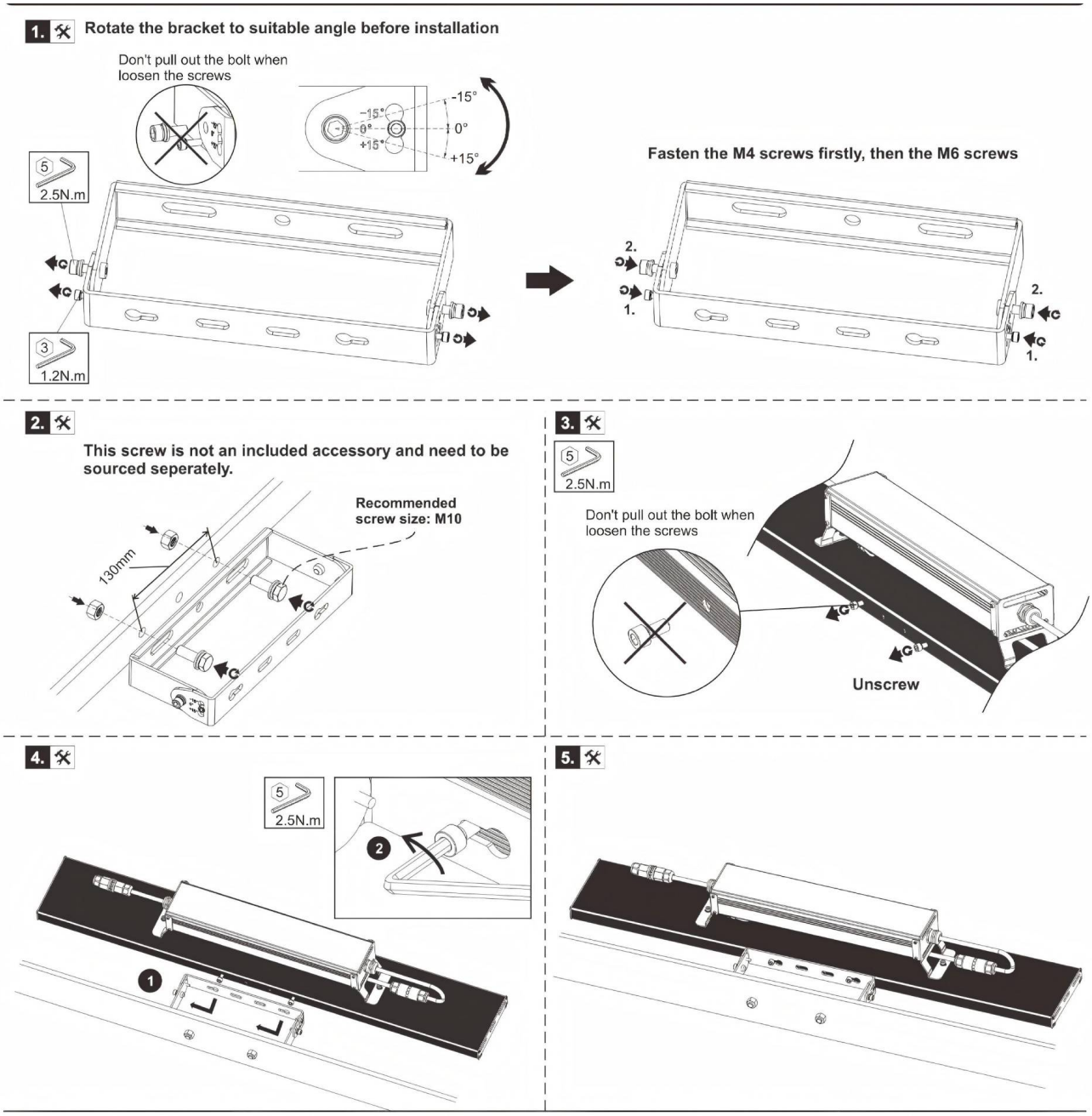
1. Rotate the bracket to suitable angle before installation
Don't pull out the bolt when loosen the screws
-15°
0°
+15°
5
2.5N.m
3
1.2N.m
Fasten the M4 screws firstly, then the M6 screws
2.
1.
2. This screw is not an included accessory and need to be sourced seperately.
Recommended screw size: M10
130mm
3.
5
2.5N.m
Don't pull out the bolt when loosen the screws
Unscrew
4.
5
2.5N.m
2
1
5.

Connect Wires

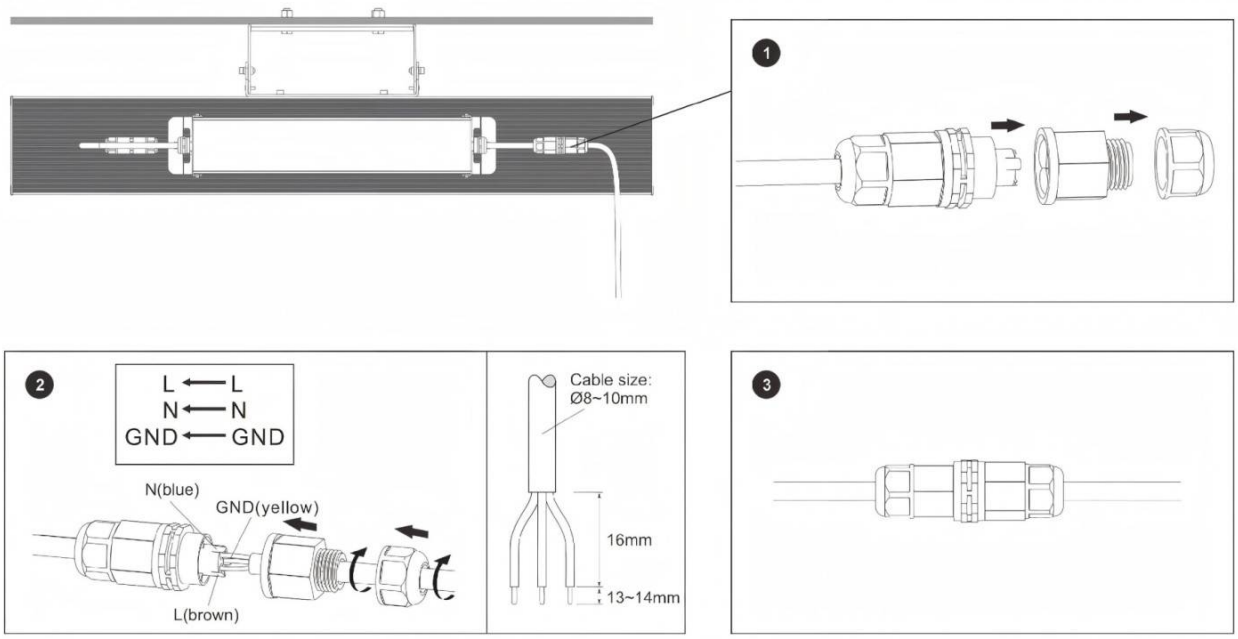

Precautions for Outdoor Lighting

Lightning is a common natural phenomenon. When the accumulation of electric charge in the thundercloud to a certain degree, air breakdown will occur to cause electrostatic discharge between the clouds, or between the cloud and the earth. Normally there are direct lightning and induction lightning, most LED luminaires damage caused by induction lightning, such as electrostatic induction or magnetic field induction.

Below pretreatment can reduce lightning hazard, and extend luminaire lifetime.

1. LED luminaire should be effectively grounded

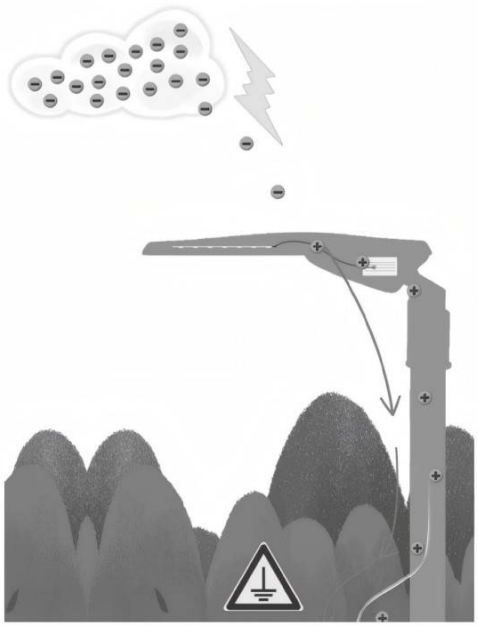

With effective grounding, the electric charge can be introduced to ground quickly

2. Install surge protector in power distribution box

The SPD can absorb most surge energy before luminaire