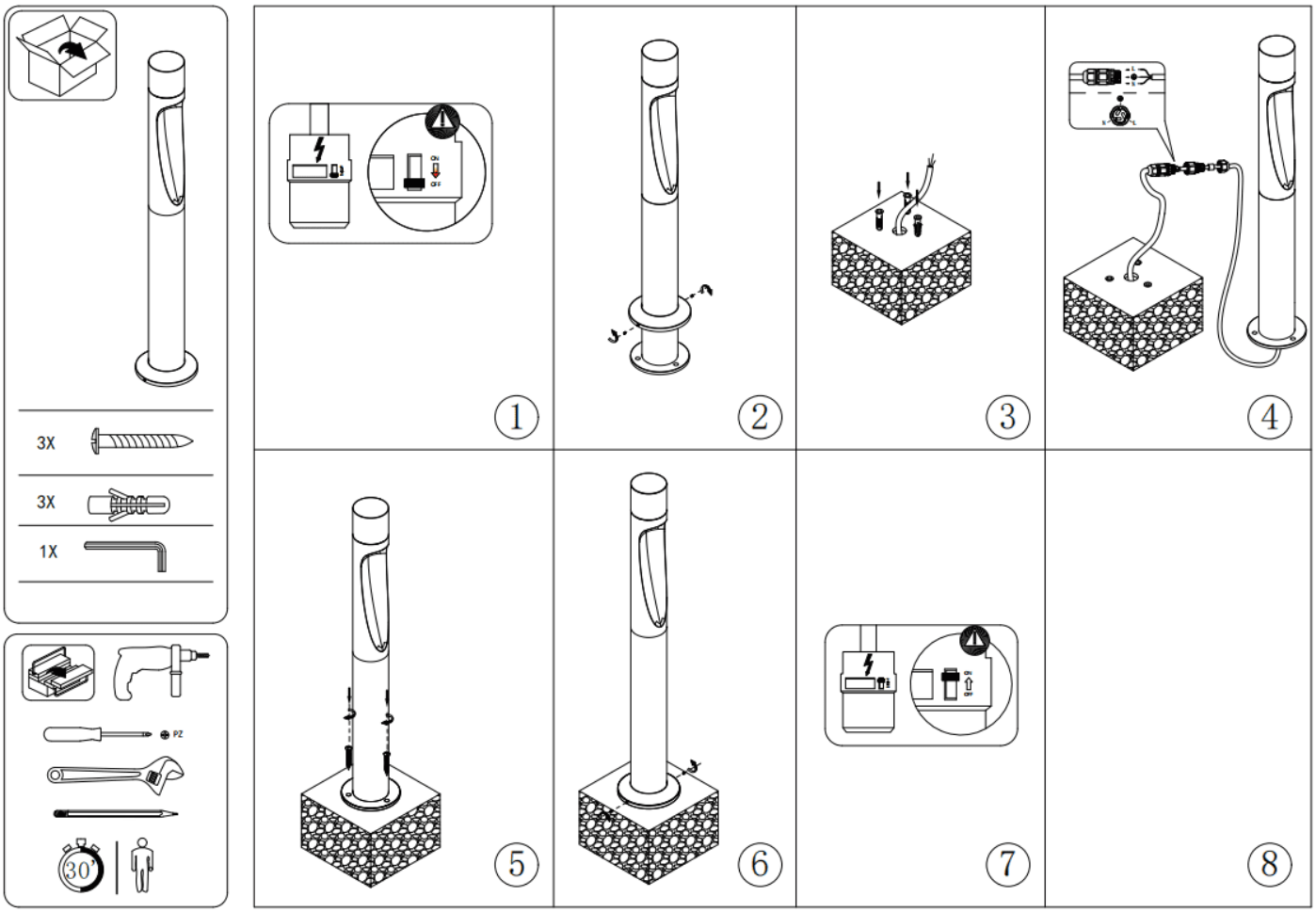Code article 86.OB18.3351.02