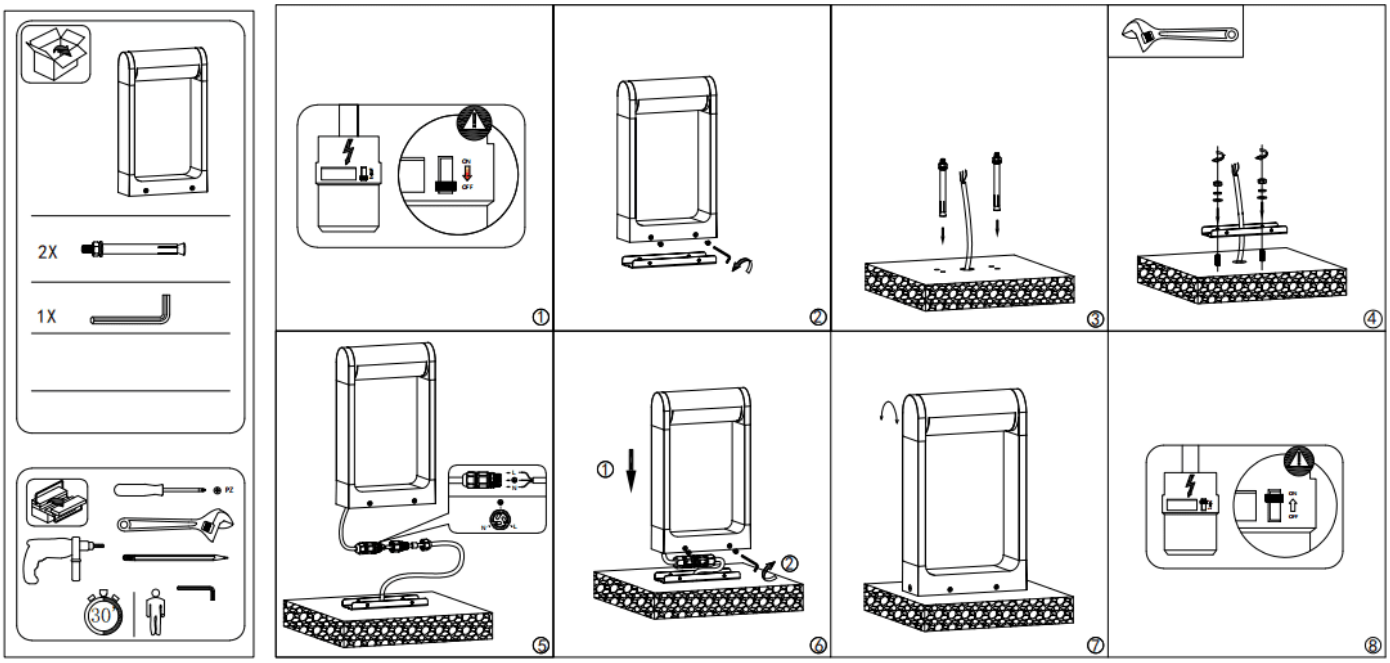
2X
1X
PZ
30
ON
OFF
①
②
③
④
⑤
⑥
⑦
⑧