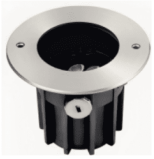

STEP 1

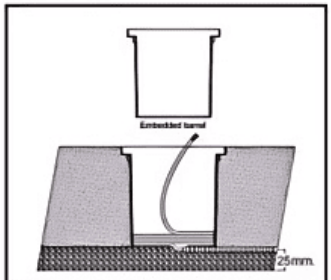

After placing the embedded bucket into the hole, keep it level with the ground, and the power cord needs to pass through the embedded bucket

Note: The thickness of the gravel must ticker than 25mm.

STEP 2

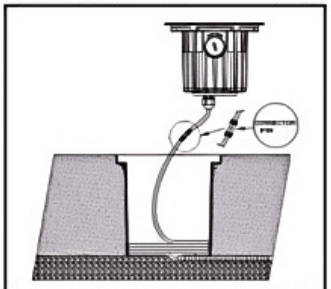

Thread one end of the power cord and the other end of the lamp power cord into the waterproof connector (IP68), connect the power cord, and then lock the waterproof connector, leaving enough length for easy maintenance

STEP 3

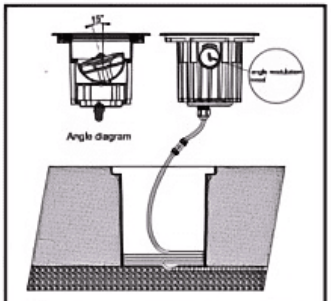

Turning the angle knob left and right can obtain different angles (0°~30°).

STEP 4

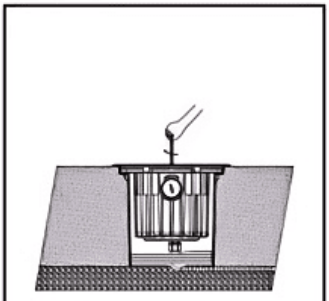

Place the long power cord in the pre embedded bucket, then place the light fixture into the pre embedded bucket and tighten the screw.
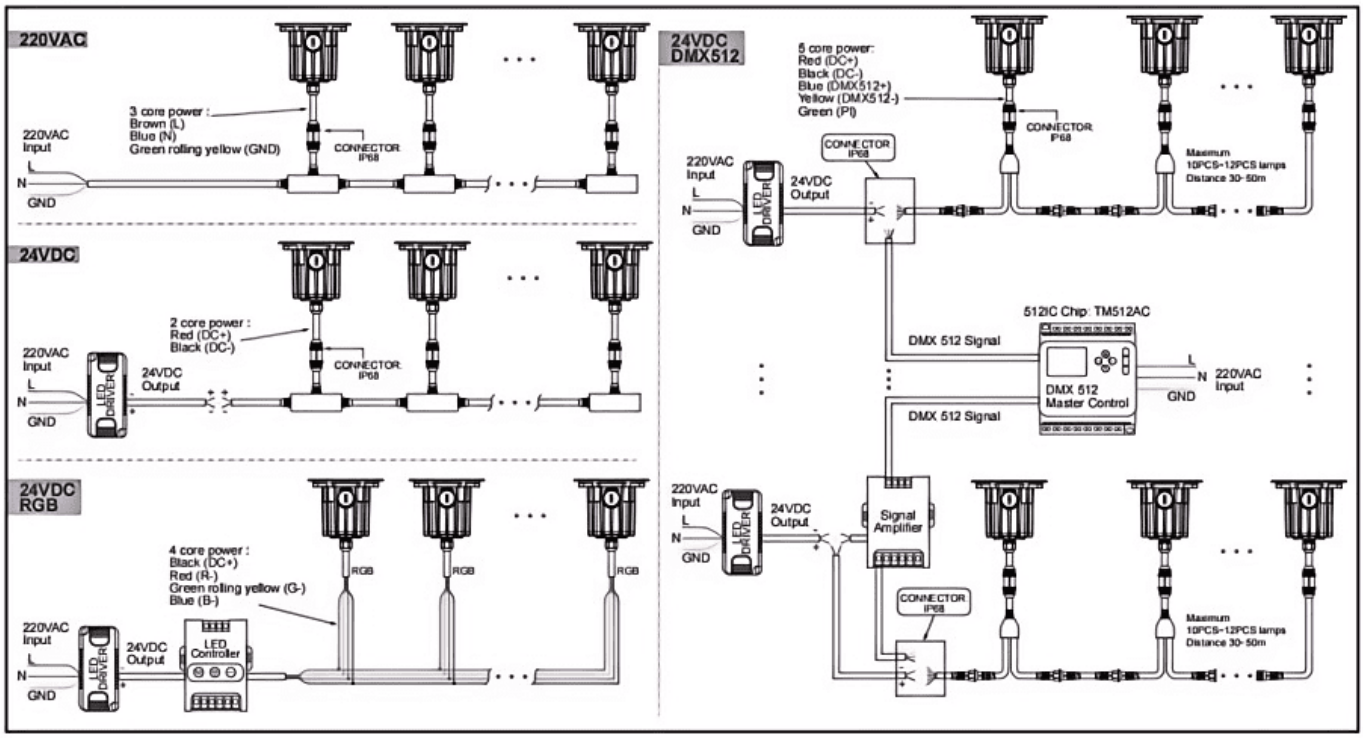
CONNECTION DIAGRAM