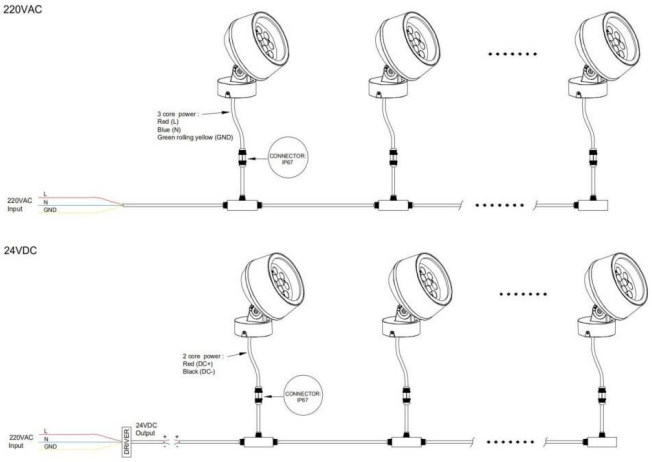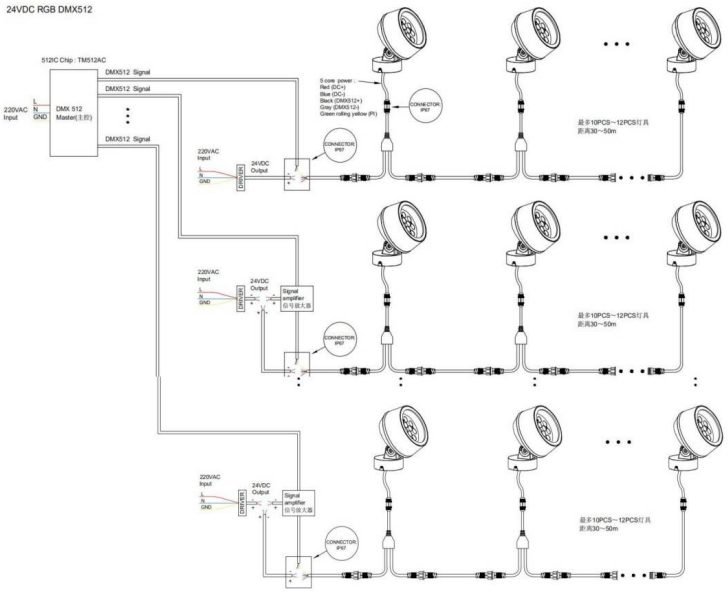Code article 86.OS01.2331.03