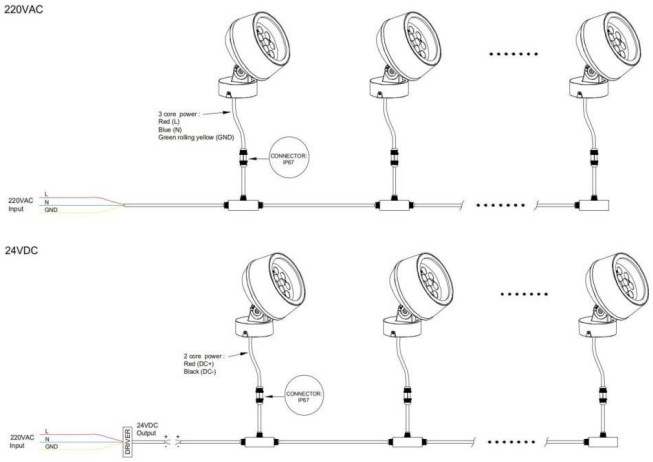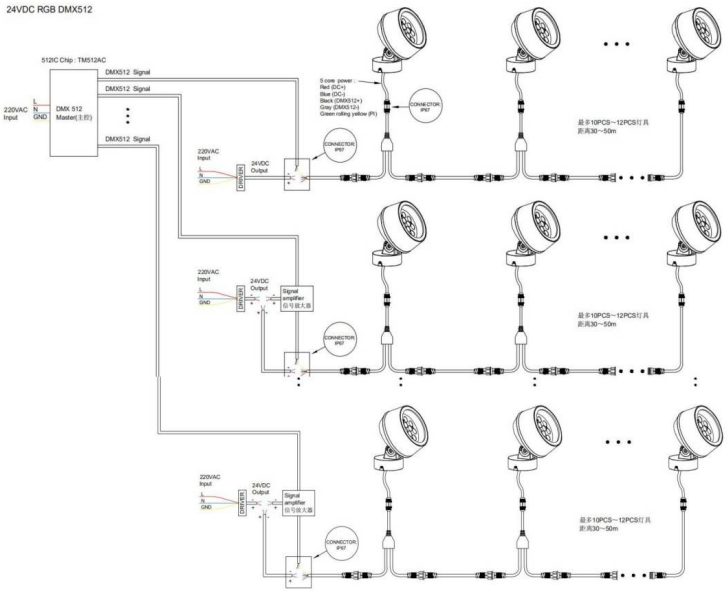Code article 86.OS01.2341.03