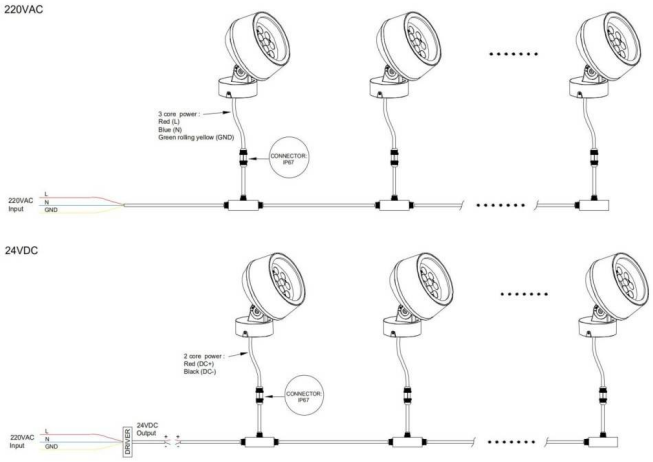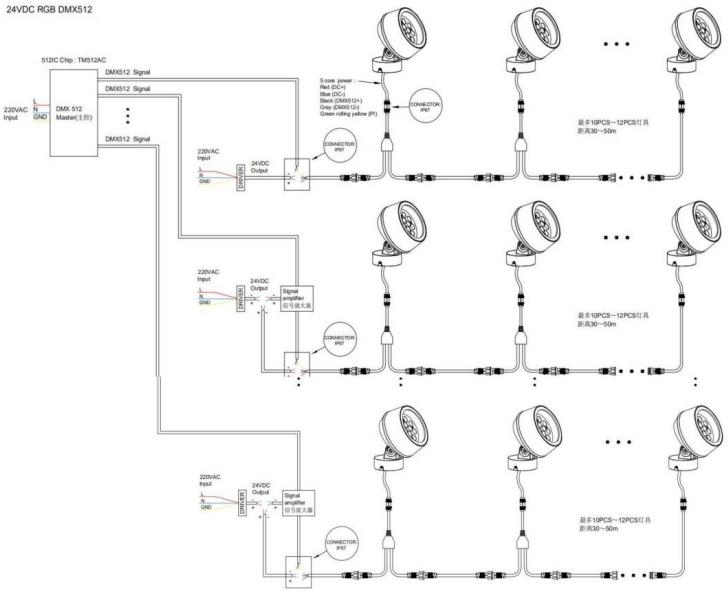Code article 86.OS01.2351.02