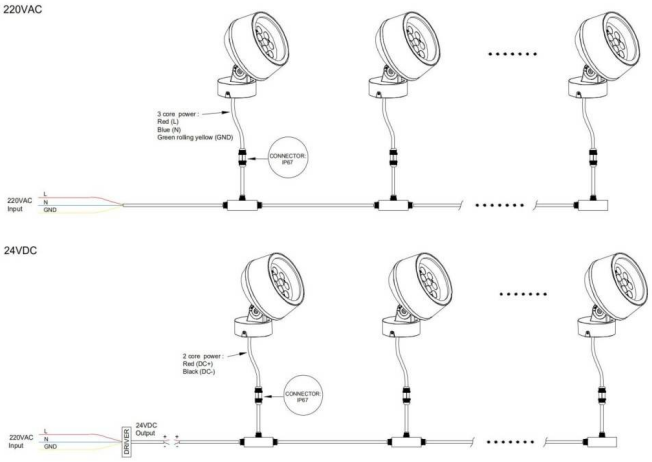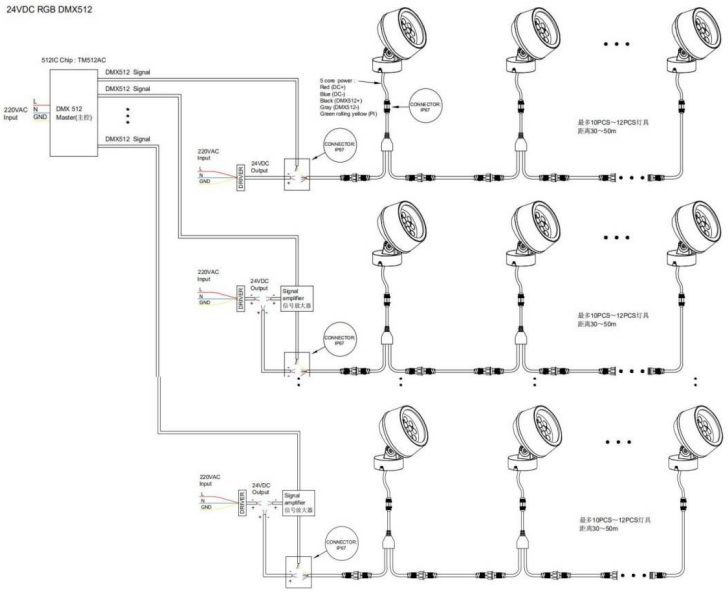Code article 86.OS01.3321.03