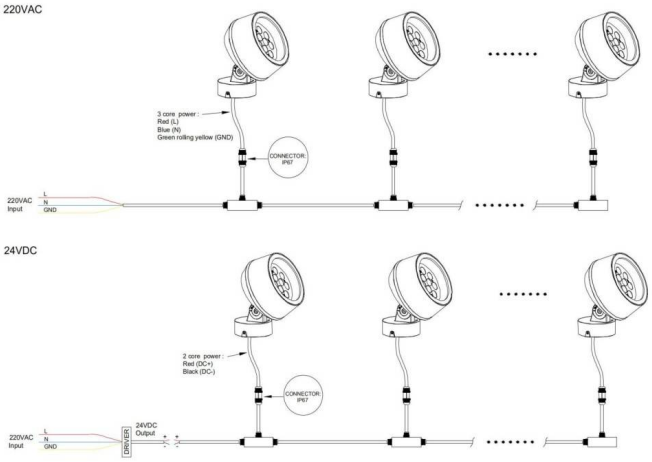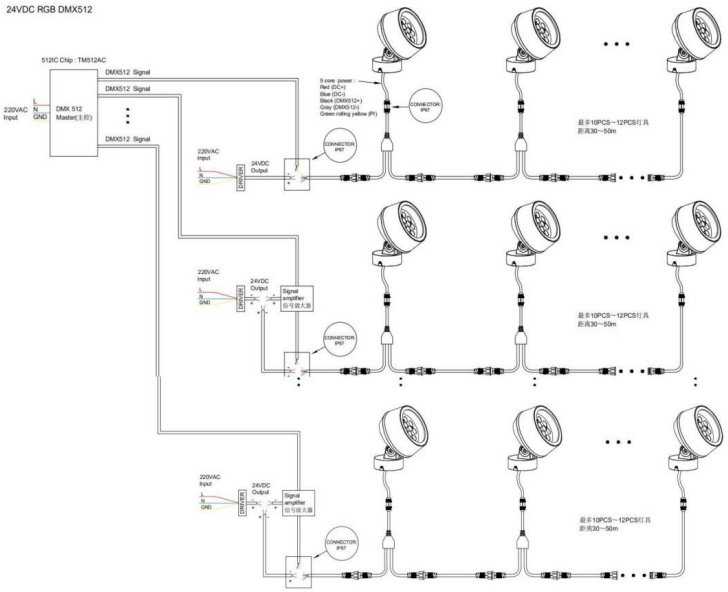Code article 86.OS01.3331.02