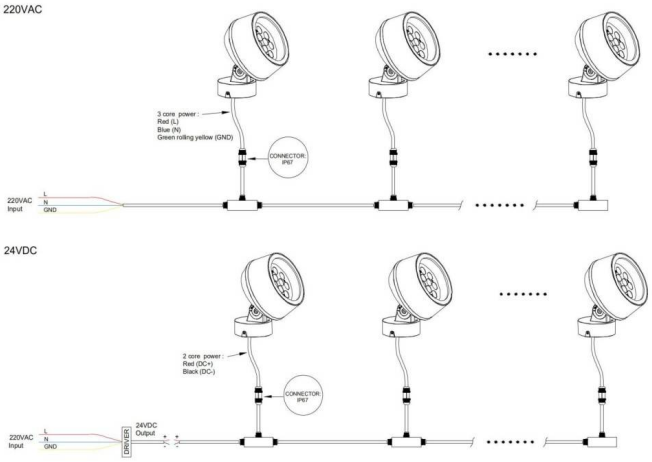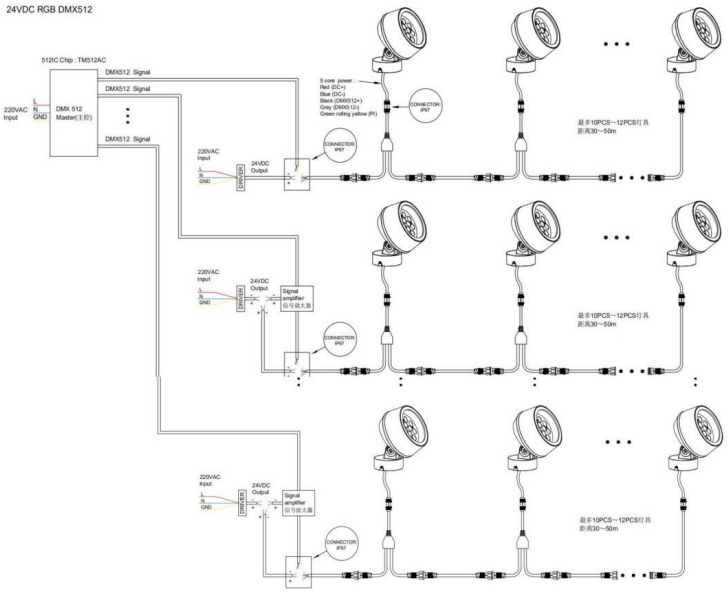Code article 86.OS01.3341.02