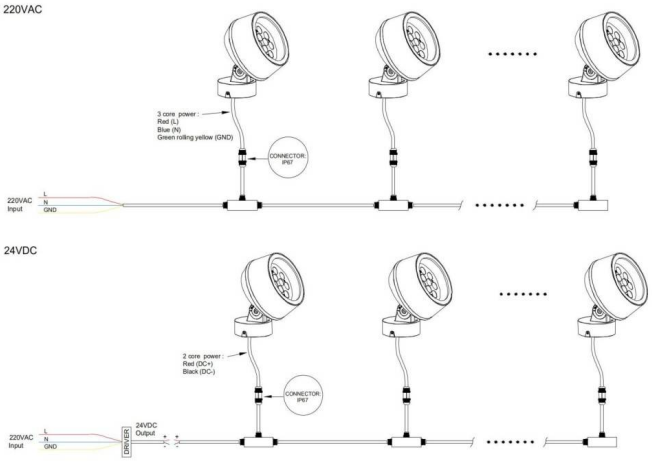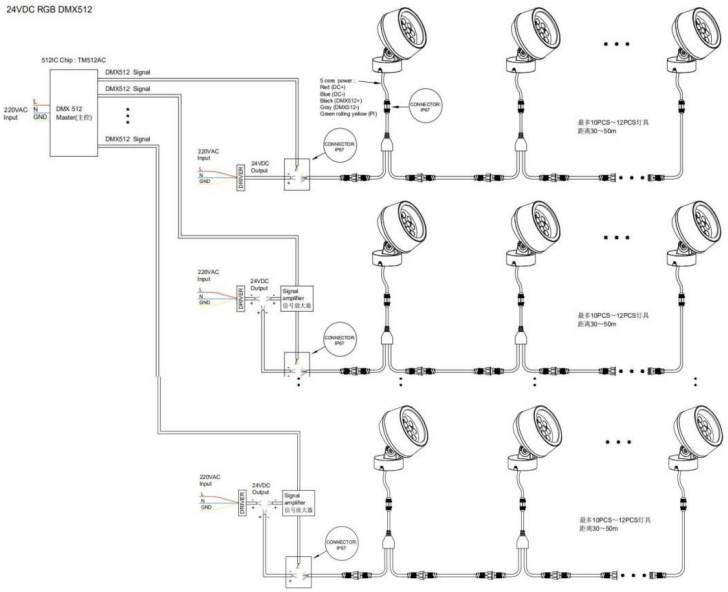Code article 86.OS01.3351.03