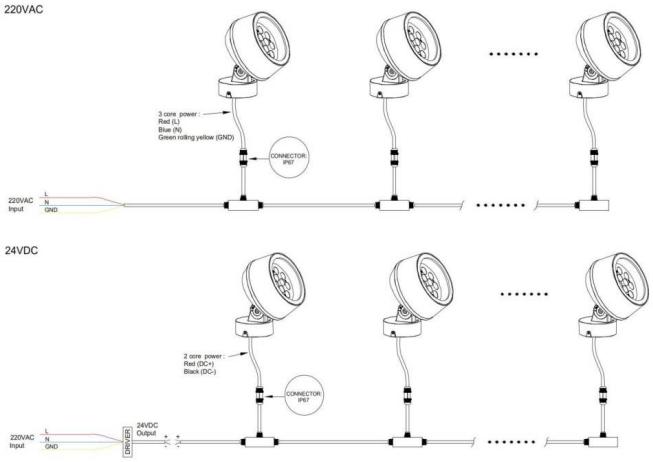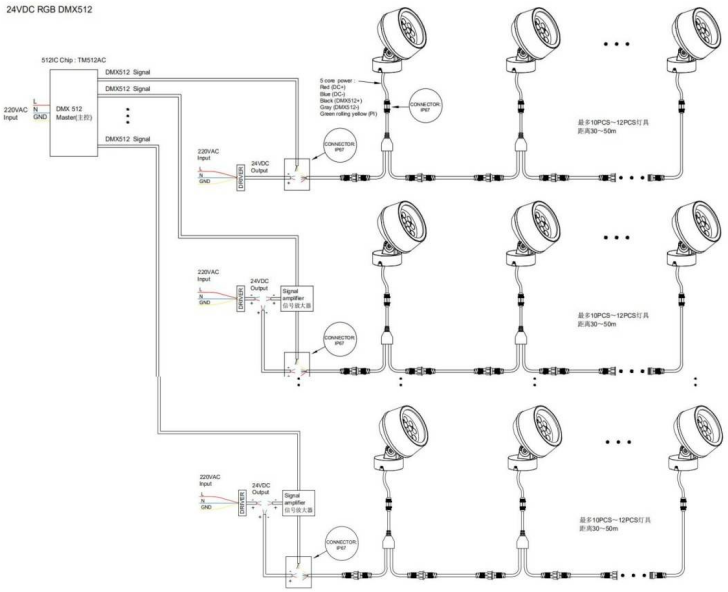Code article 86.OS02.1021.03