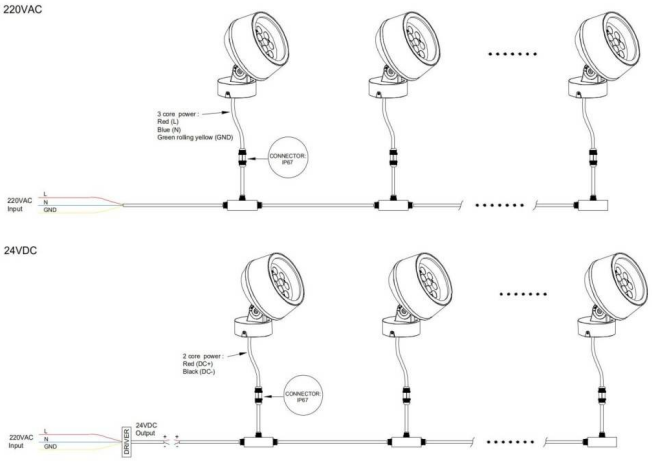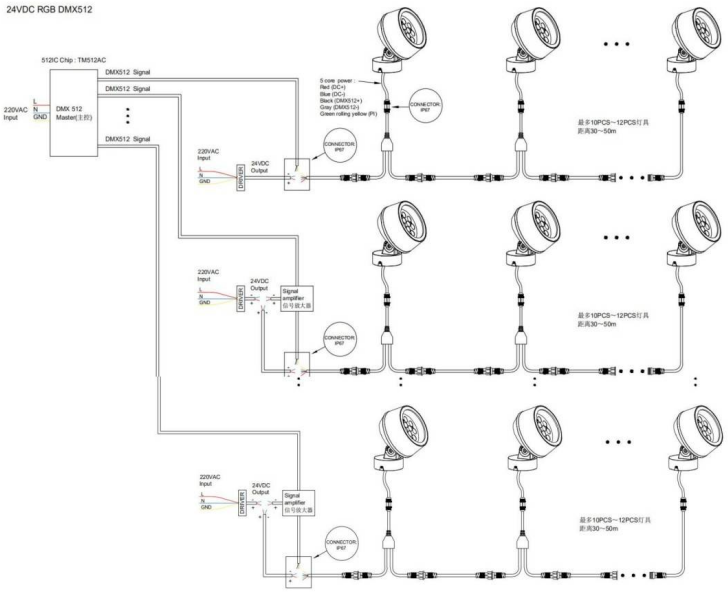Code article 86.OS02.1031.02