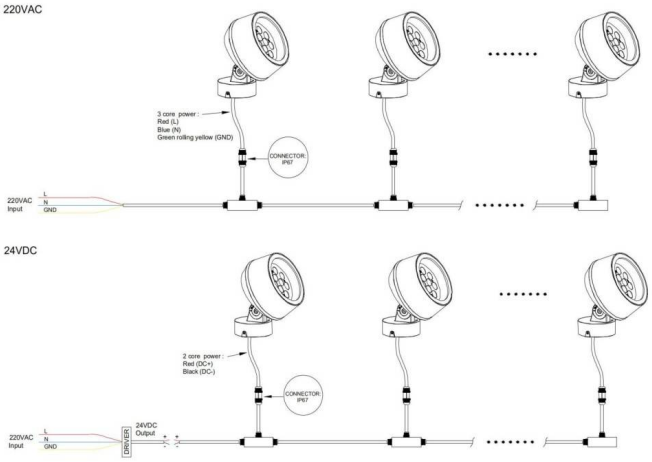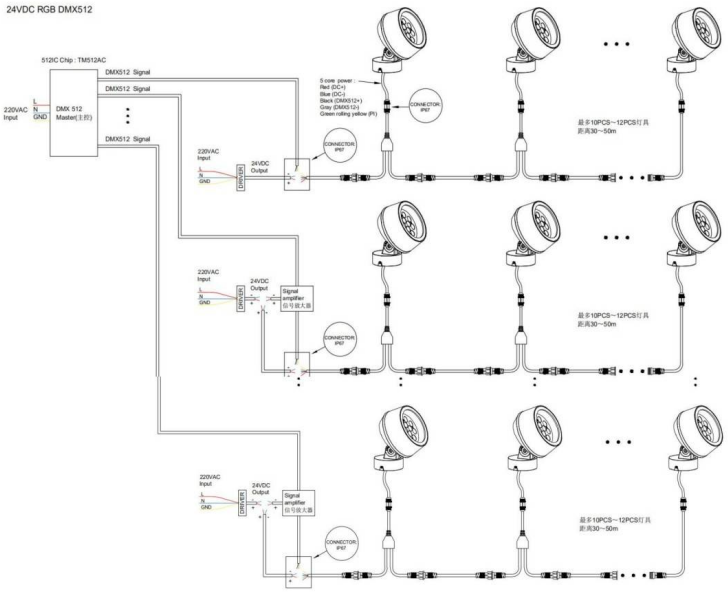Code article 86.OS02.1041.02