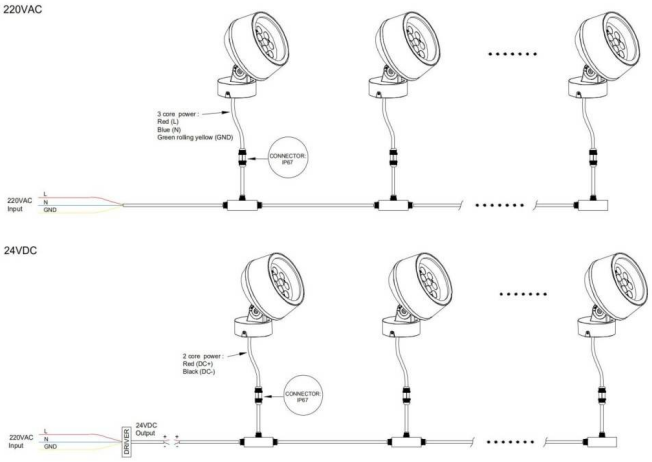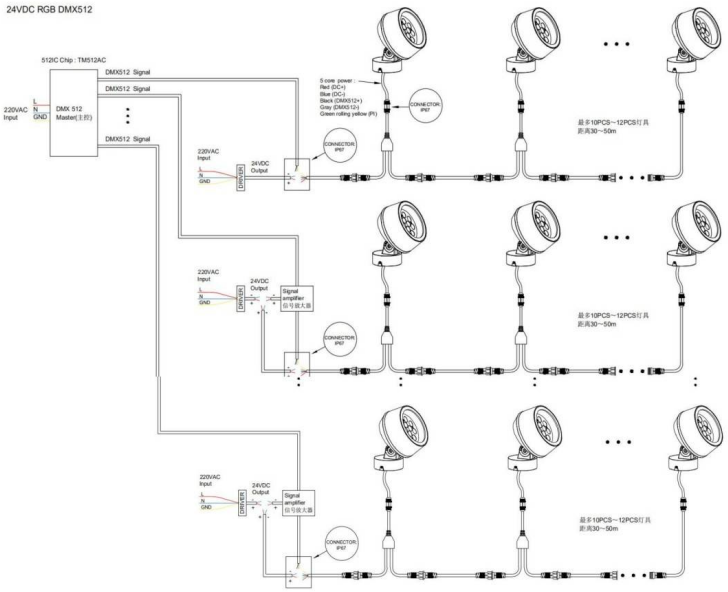Code article 86.OS02.1051.02