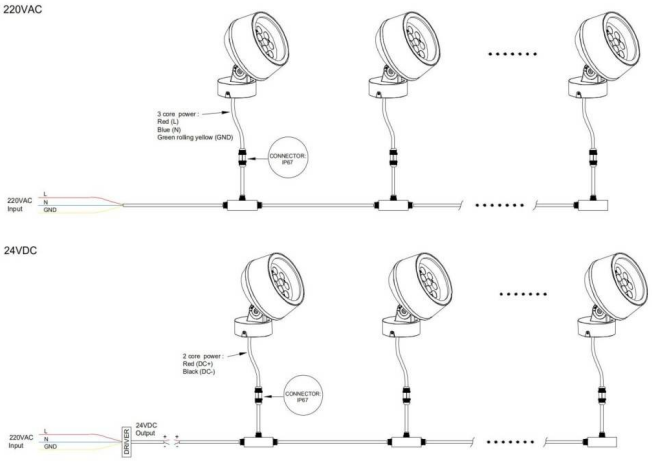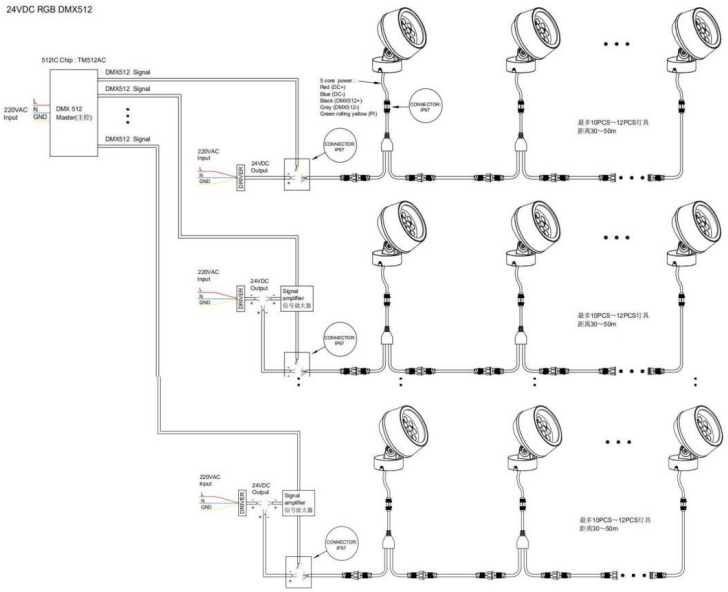Code article 86.OS02.2031.03