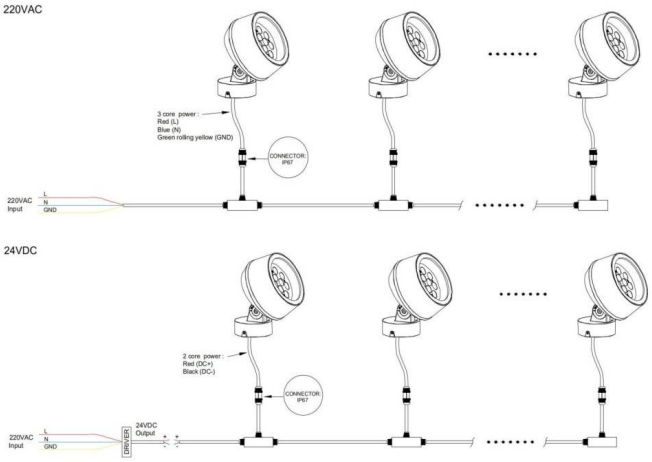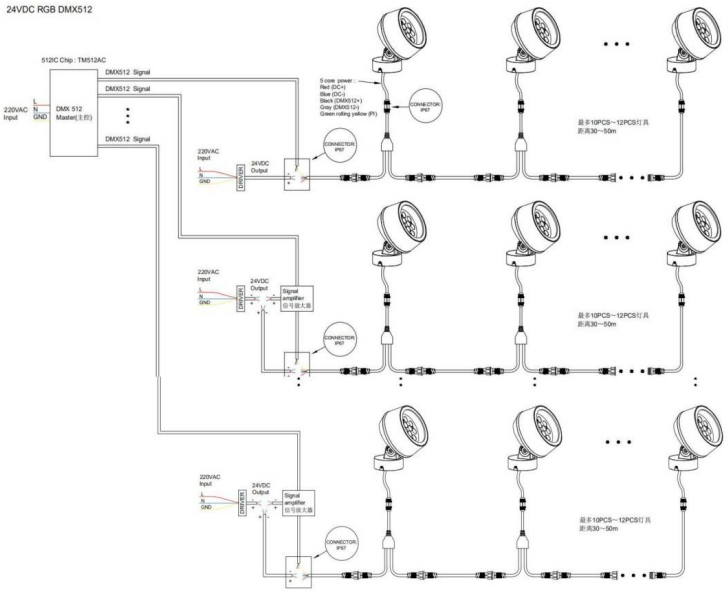Code article 86.OS02.2041.02