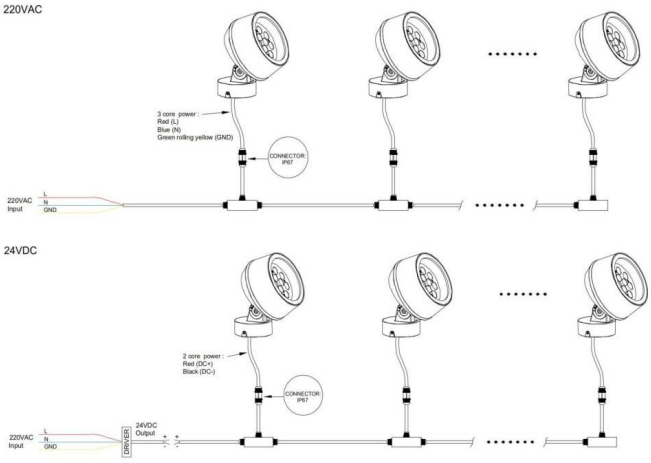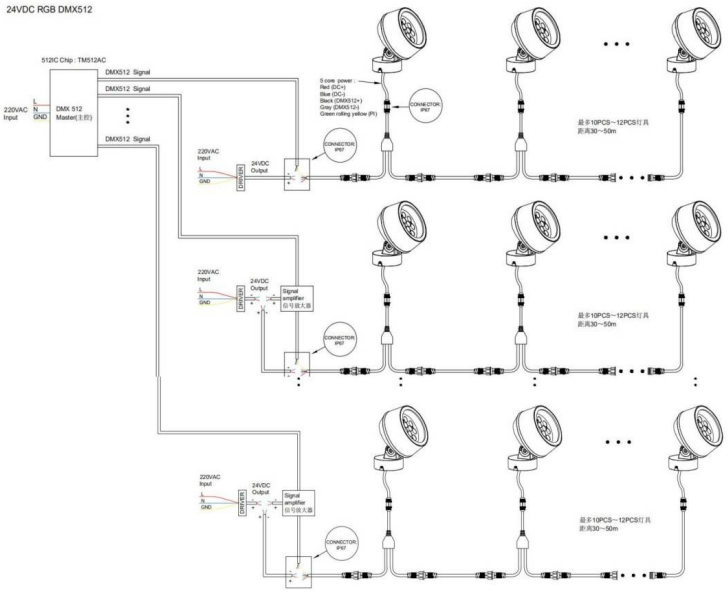Code article 86.OS02.2051.03