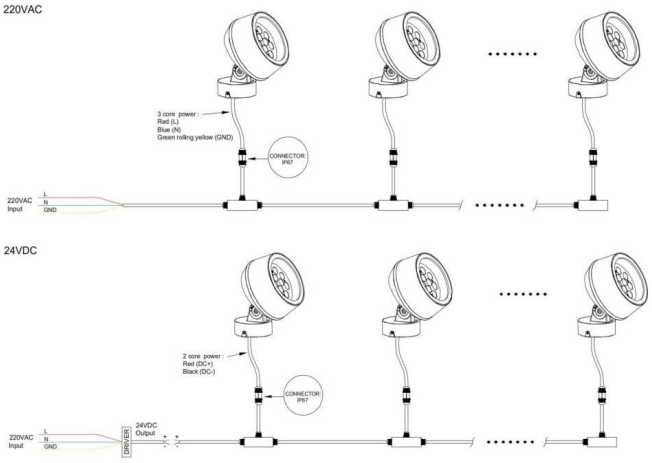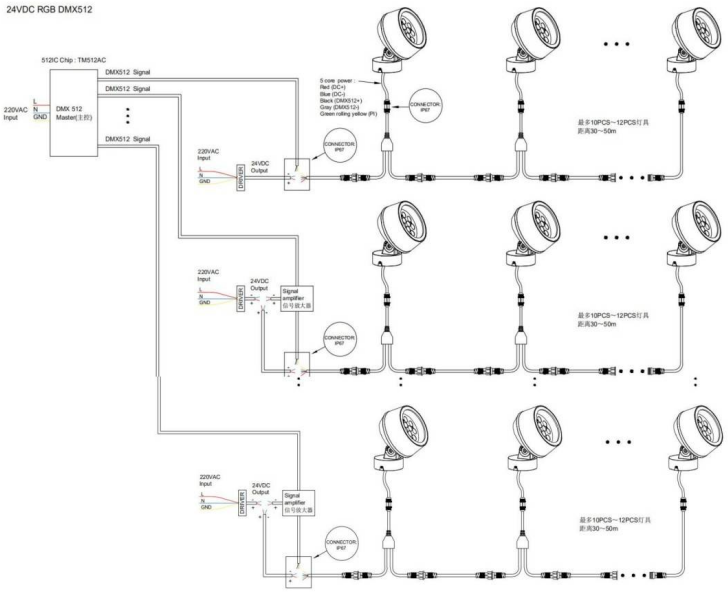Code article 86.OS02.3021.02