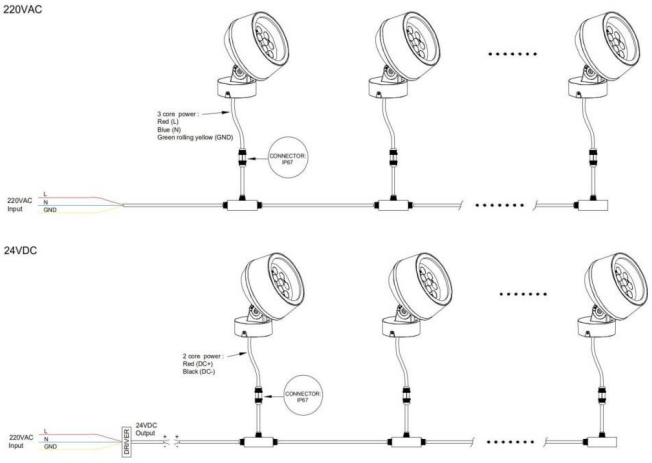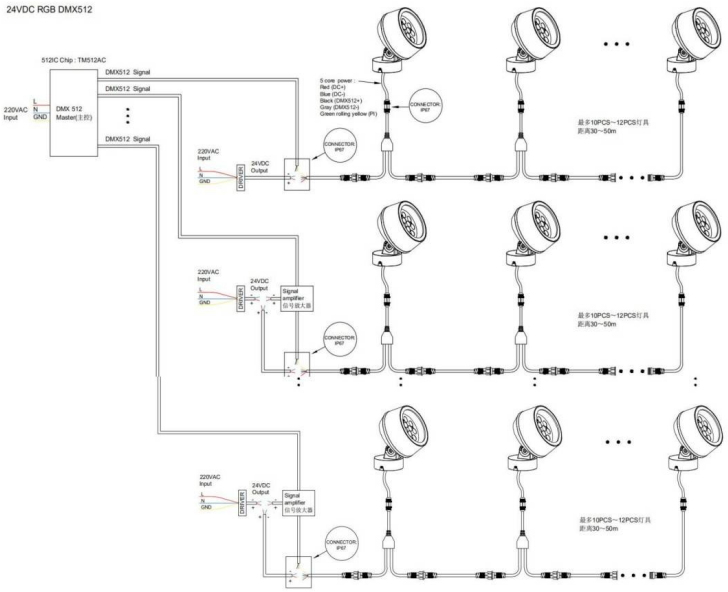Code article 86.OS02.3031.02