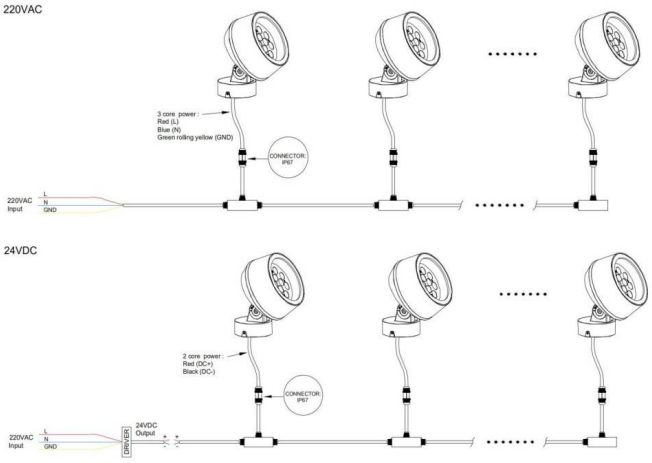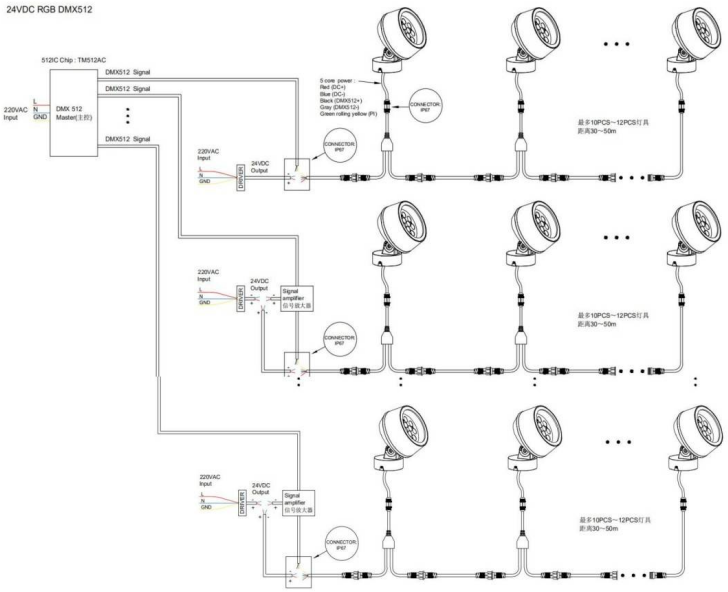Code article 86.OS02.3041.03