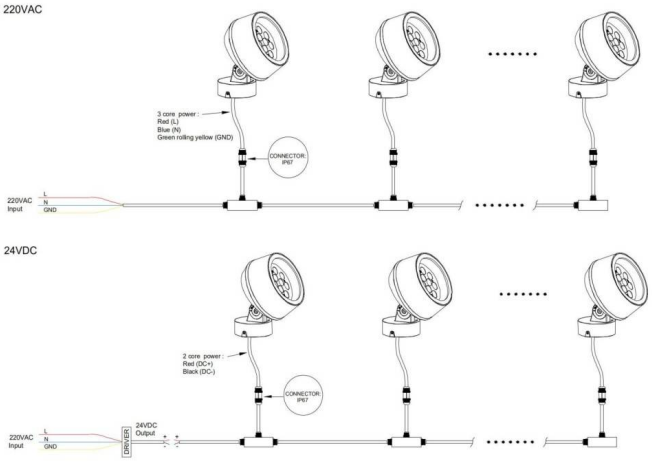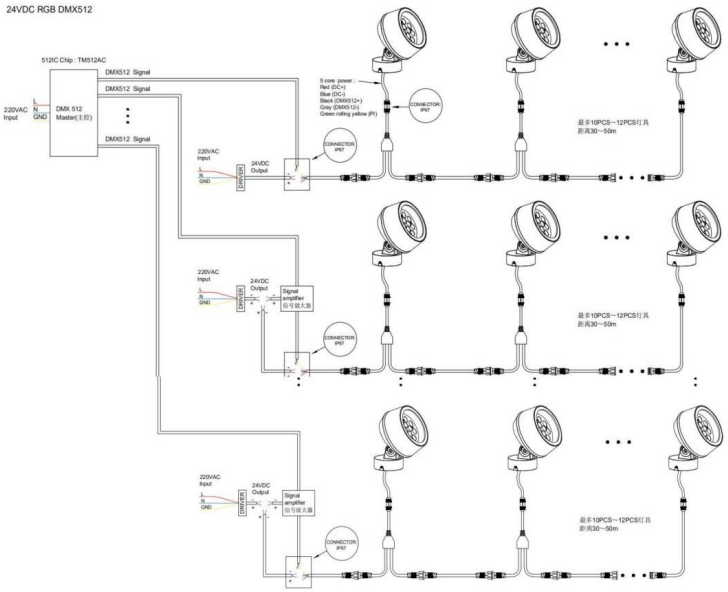Code article 86.OS02.3051.02