Code article 86.OS07.4331.02

①

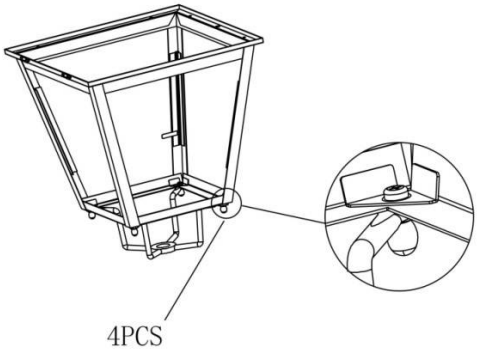

②

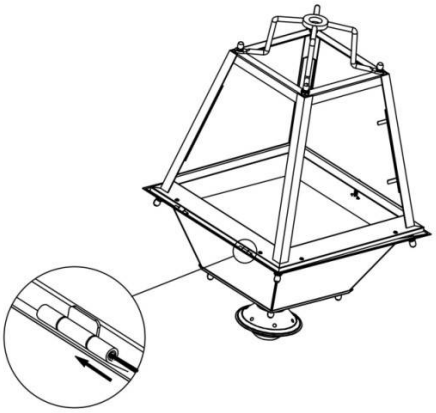

③

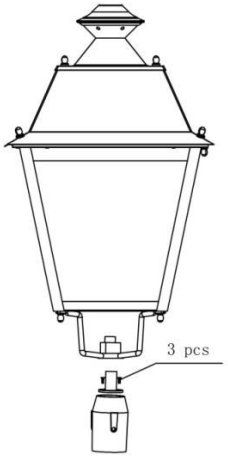

④

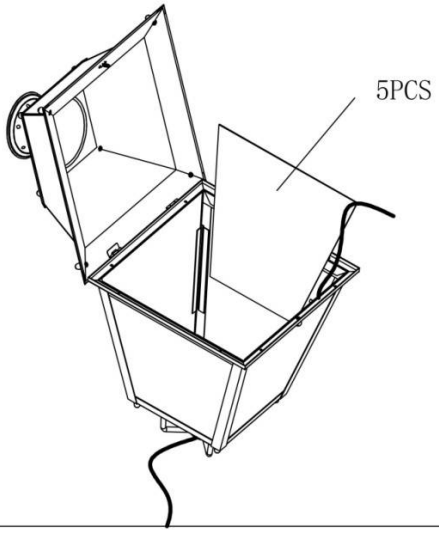

⑤

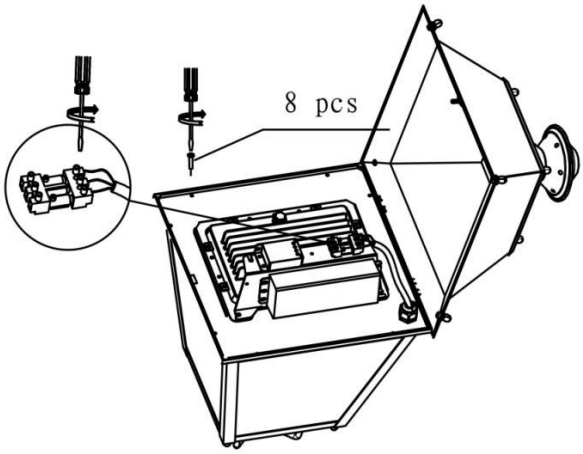
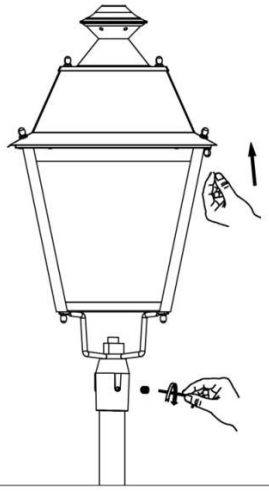
⑥