Code article 86.OW11.2321.02

①

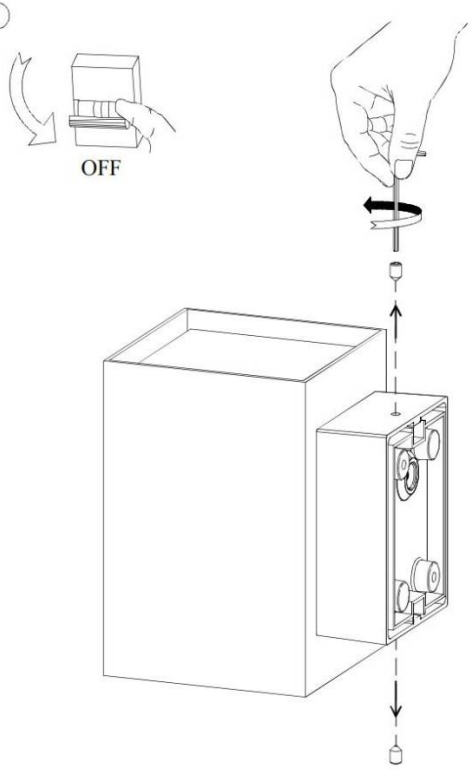

②

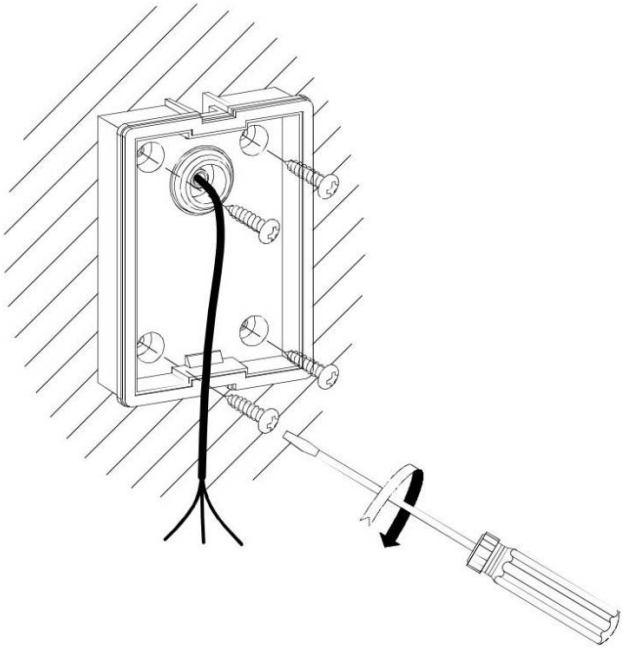

③

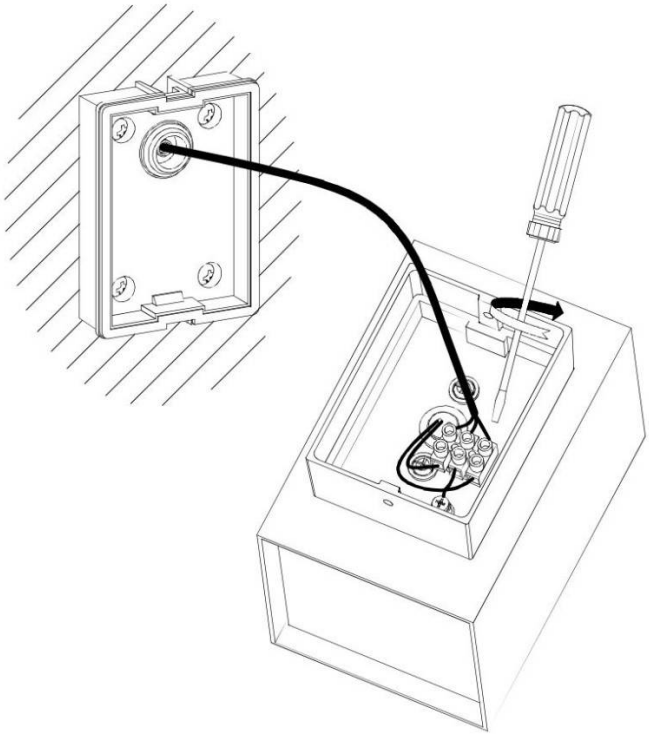
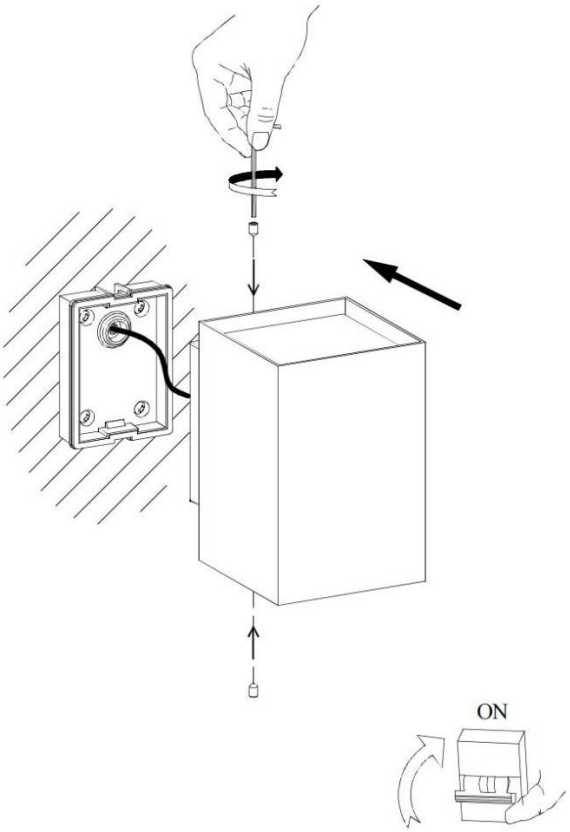
④