Code article 86.OW11.2321.03

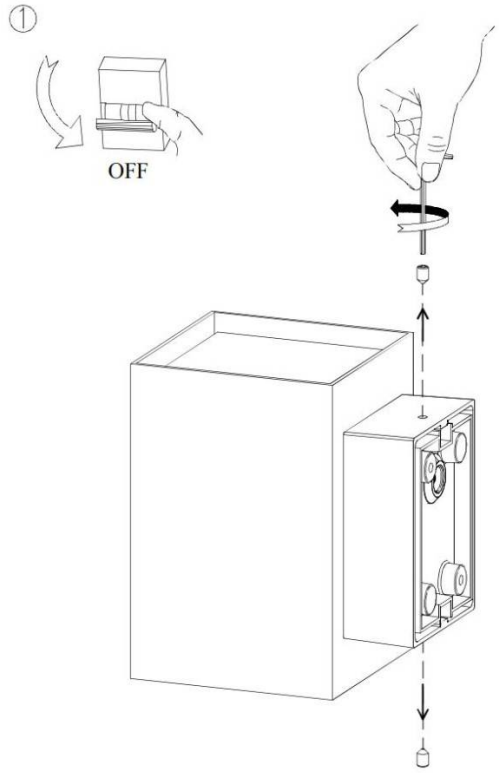
①
OFF

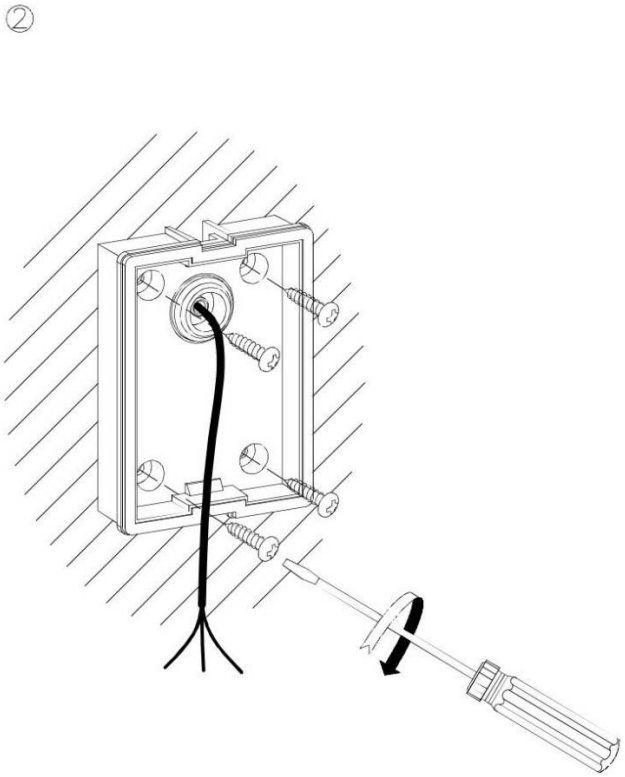
②

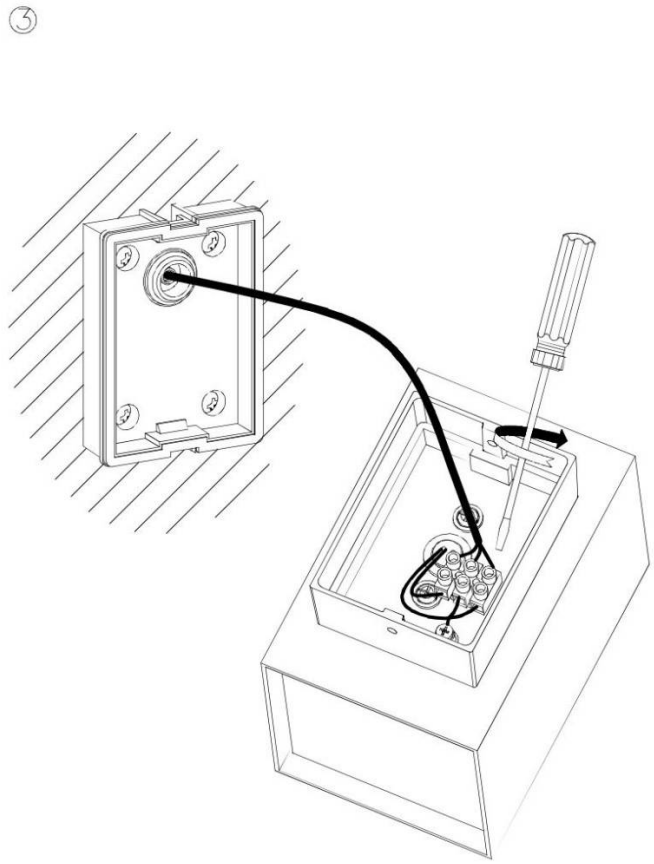
③

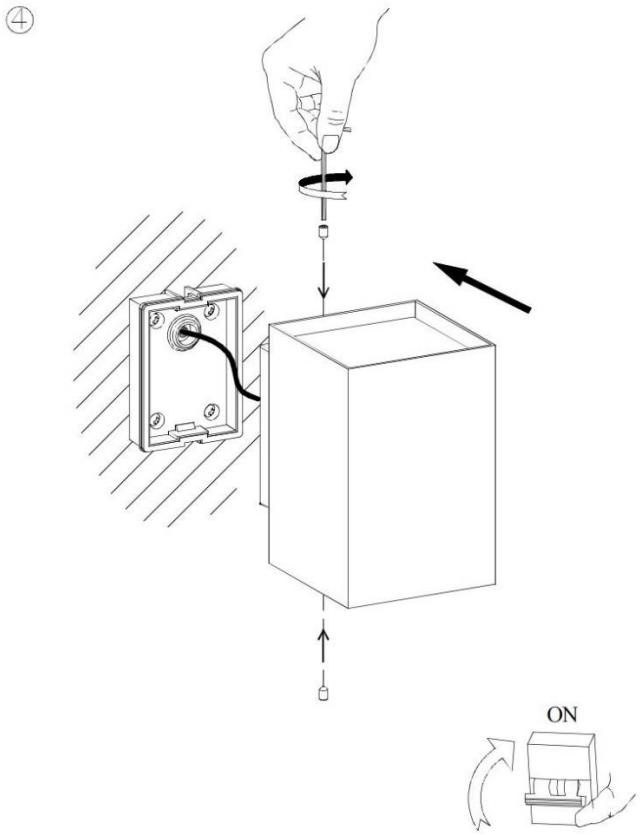
④
ON