Code article 86.OW11.4301.02

①

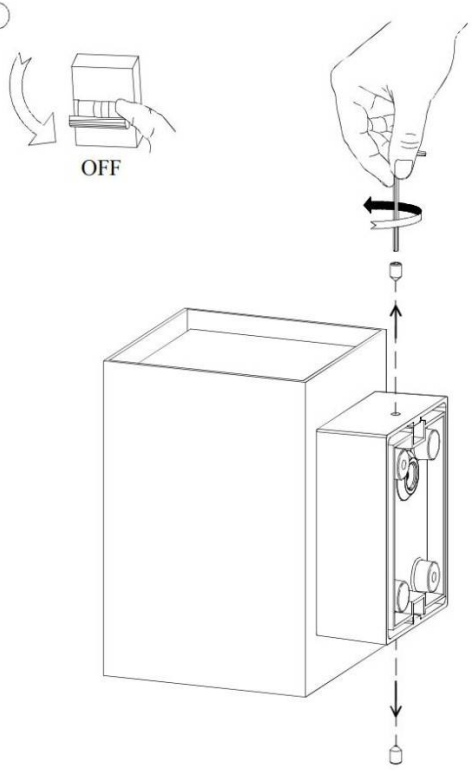

②

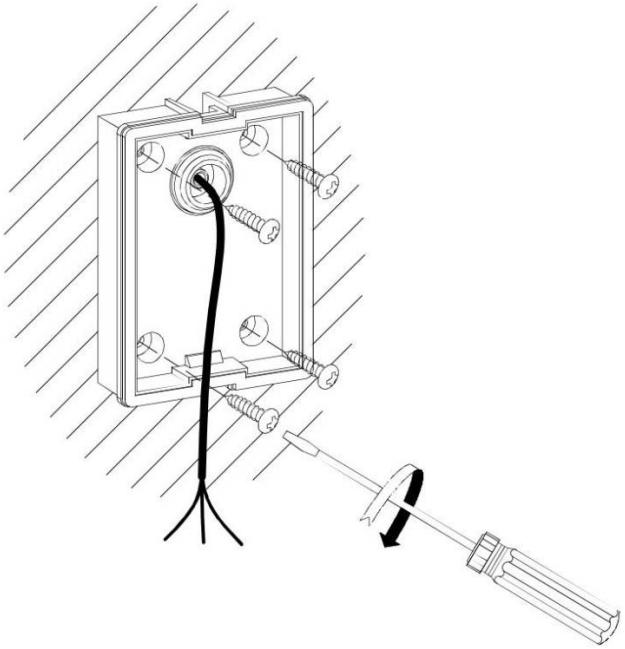

③

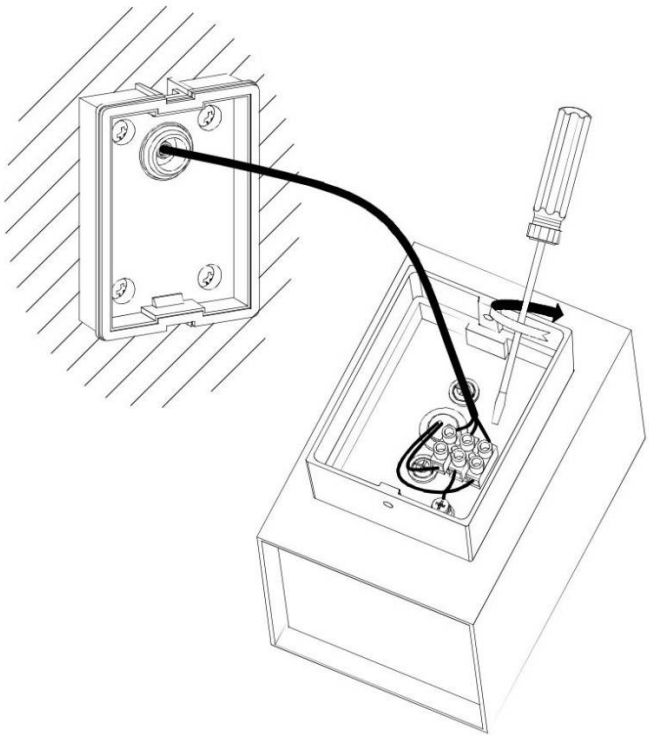
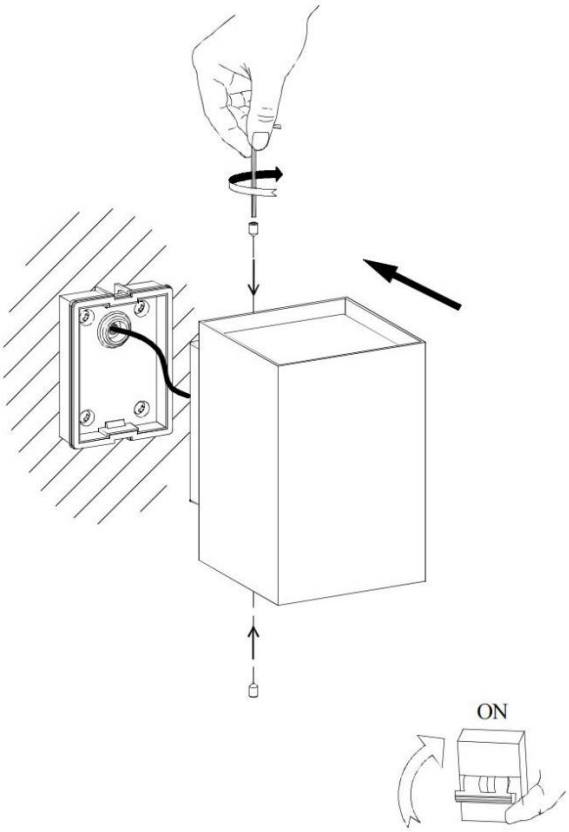
④