OUTDOOR / WALL LIGHT / ORBIT /
ORBIT S

Code article 86.OW27.1221.03



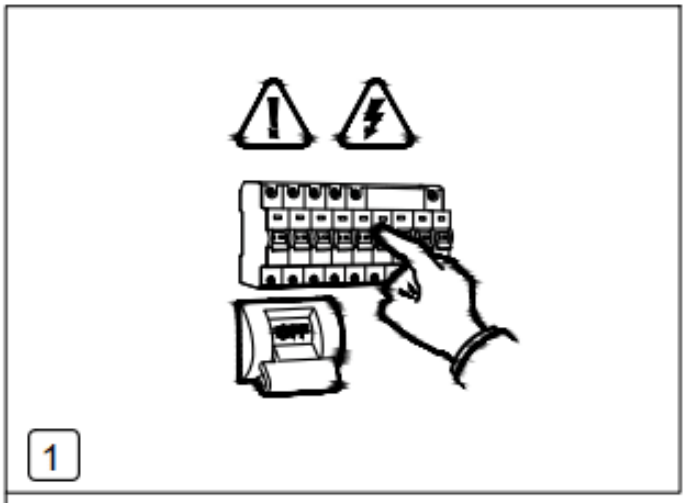
1

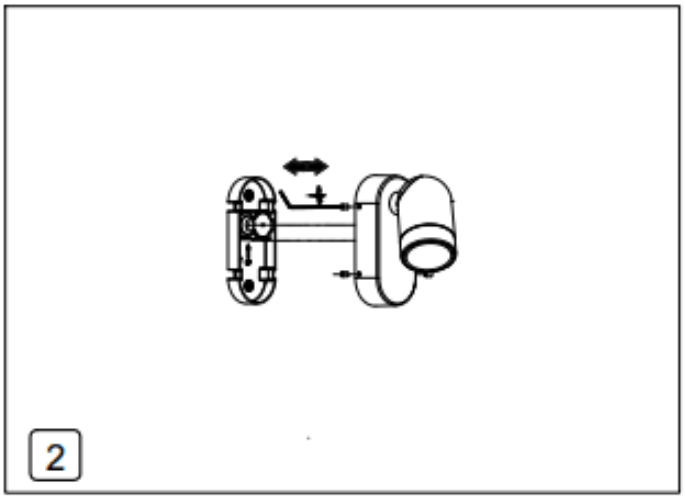
2

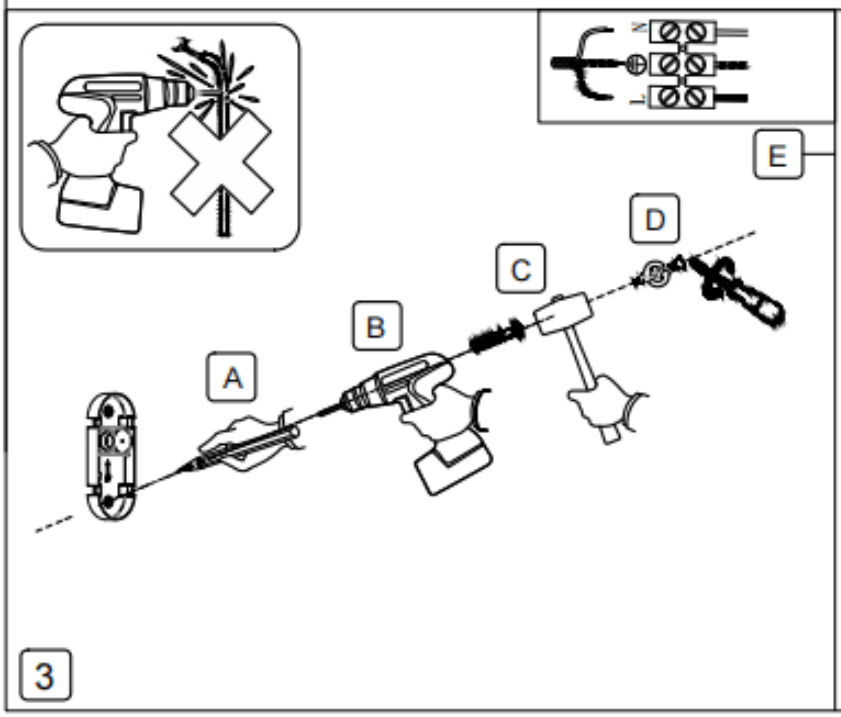
E
D
C
B
A
3

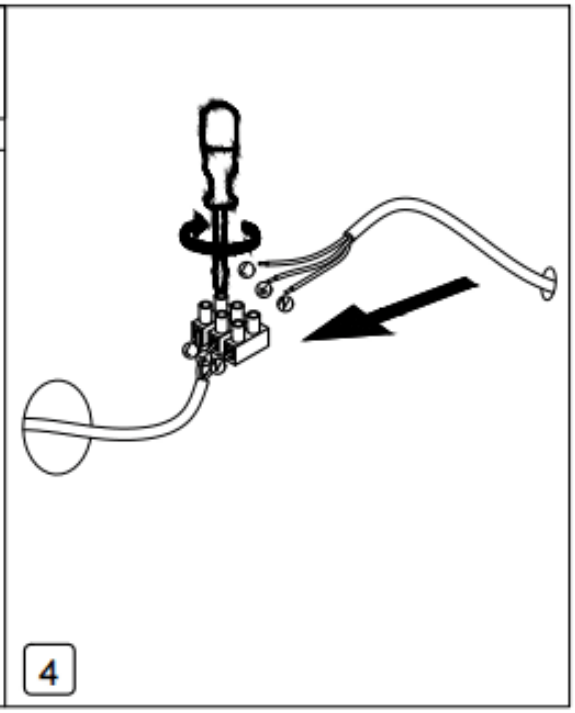
4

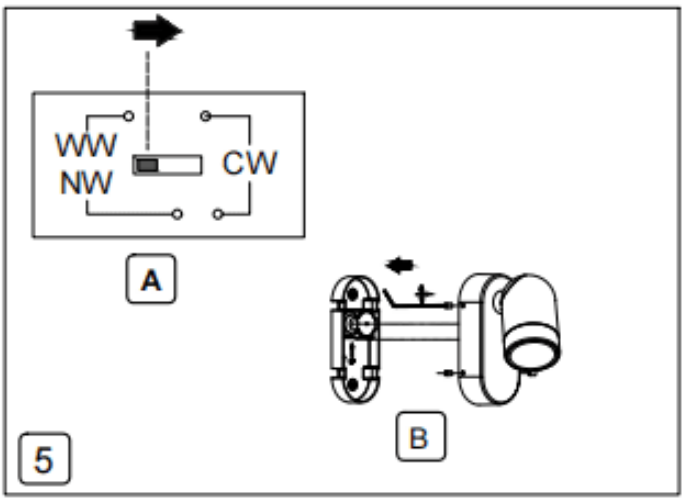
WW
NW
CW
A
B
5

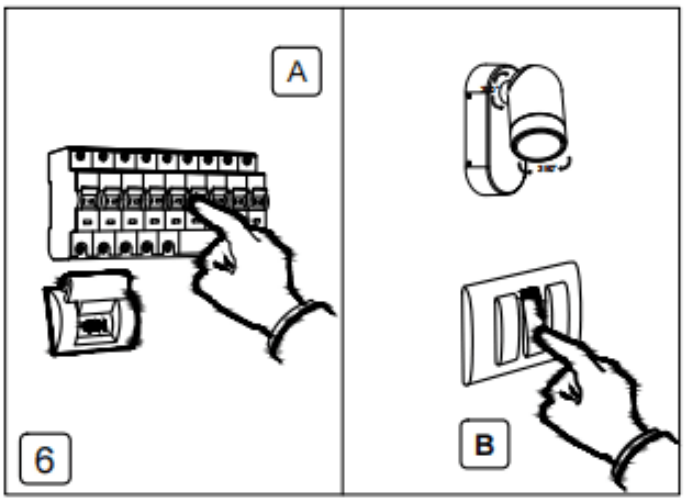
A
B
6