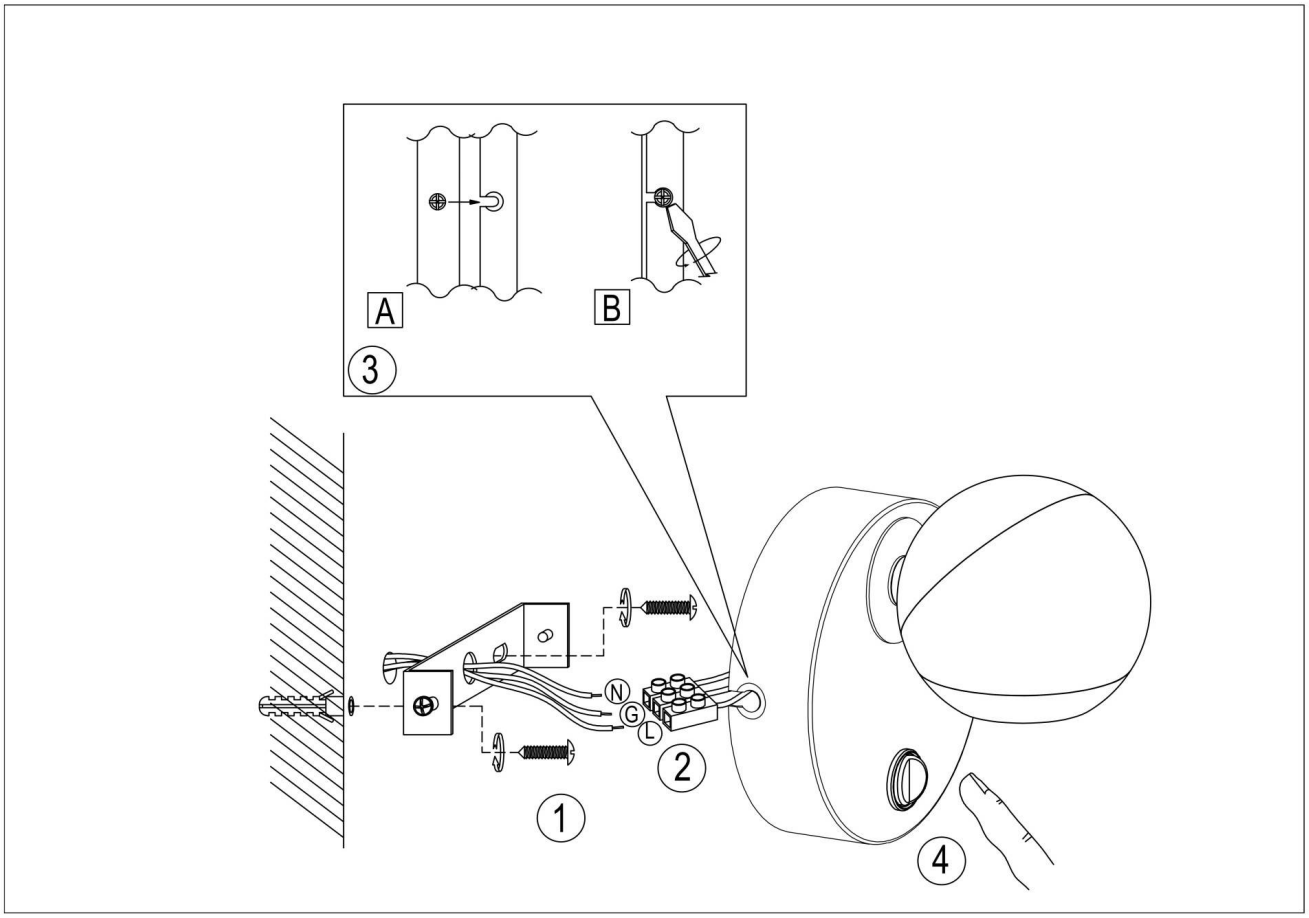Code article 86.RL01.1321.02